Comfort system

⇒ Outside Mirror, heated and adjustable
⇒ Door opener lighting
⇒ Alarm system
⇒ Entry lights
⇒ Power Window
⇒ Front Interior Lights
⇒ Luggage Compartment Light
⇒ Door warning lights
⇒ Central Locking System

From November 2004

Notes:

Information for

- ♦ Relay and fuse arrangements
- ♦ Connector arrangements
- ♦ Control Modules and Relays
- ♦ Ground connections

⇒ Component Locations!

Information for

- ♦ Troubleshooting Procedures

⇒ Guided Fault Finding using VAS 5051/5052

Protected by copyright. Copying for private or commercial purposes, in part or in whole, is not permitted unless authorised by AUDI AG. AUDI AG does not guarantee or accept any liability with respect to the correctness of information in this document. Copyright by AUDI AG.

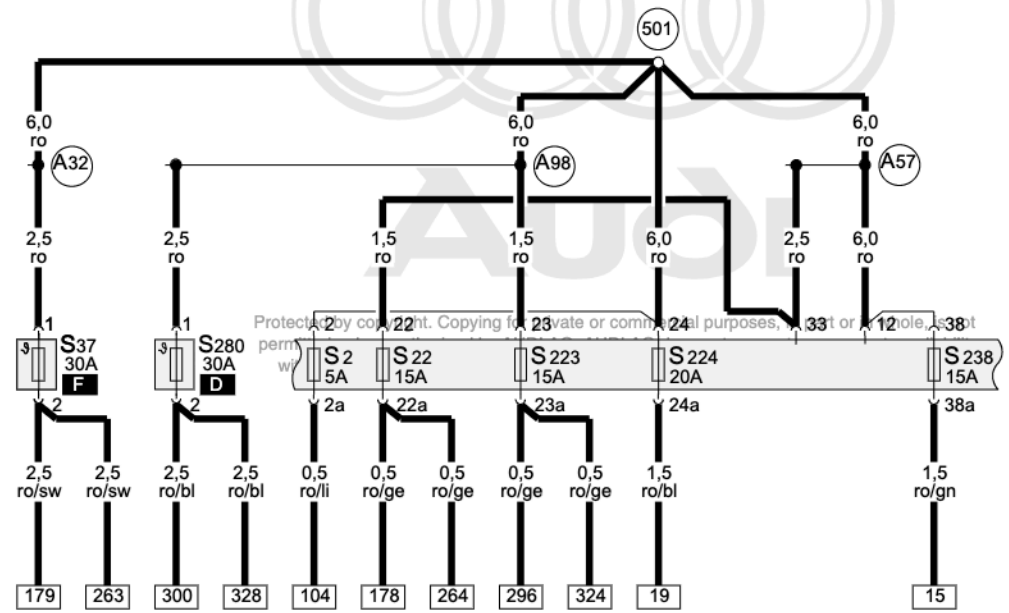

Protected by copyright. Copying for private or commercial purposes, in part or in whole, is not permitted unless authorized by AUDI AG.

Fuses, Ground connections

S2	Fuse (on fuse/relay panel)
S22	Fuse (on fuse/relay panel)
S37	Power Window Fuse
S223	Fuse (on fuse panel)
S224	Fuse (on fuse panel)
S238	Fuse (on fuse panel)
S280	Power Window Fuse 2
44	Ground connection (lower left A-pillar)
77	Ground connection (lower left B-pillar)
78	Ground Connection (lower right B-pillar)
249	Ground connection -2-, in wiring harness interior
277	Ground connection -3-, in wiring harness interior
347	Ground connection (in roof wiring harness)
501	Threaded connection -2- (30), on the relay plate
A32	Plus connection (30), in instrument panel wiring harness
A57	Plus connection -2- (30), in instrument panel wiring harness
A98	Plus connection -4- (30), in instrument panel wiring harness
Q	4.0mm² cross-section where applicable

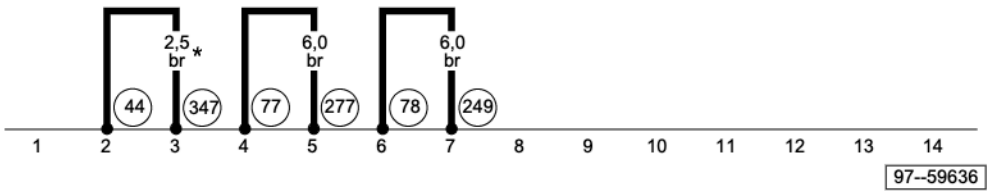

ws	=	white
sw	=	black
ro	=	red
br	=	brown
gn	=	green
bl	=	blue
gr	=	grey
li	=	lilac
ge	=	yellow
or	=	orange
rs	=	pink

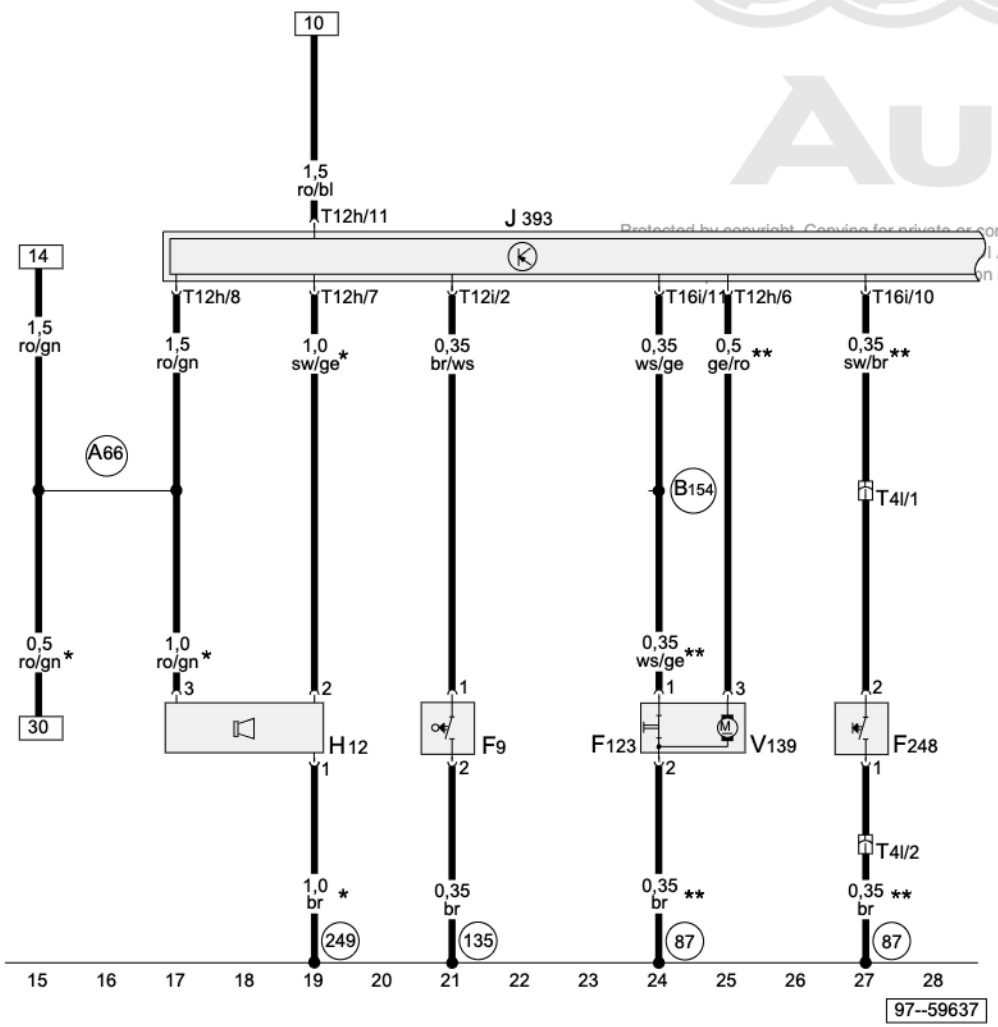

Protected by copyright. Copying for private or commercial purposes, in part or in whole, is not permitted. AUDI AG does not guarantee or accept any liability with respect to the information in this document. Copyright by AUDI AG.

Comfort System Central Control Module, Trunk Lid Unlock Motor, Trunk Lid Alarm Switch

F9	Parking Brake Warning Light Switch
F123	Trunk Lid Alarm Switch
F248	Rear Lid Lock Cylinder Unlock Button
H12	Alarm Horn
J393	Comfort System Central Control Module
T4l	4-Pin Connector, black, in rear lid
T12h	12-Pin Connector, black, on central control module for comfort system (used to be Connector 1)
T12i	12-Pin Connector, black, on central control module for comfort system (used to be Connector 3)
T16i	16-Pin Connector, brown, on central control module for comfort system (used to be Connector 5)
V139	Motor to unlock rear lid
87	Ground connection -2-, in rear wiring harness
135	Ground connection -2-, in instrument panel wiring harness
249	Ground connection -2-, in wiring harness interior
A66	Connector (30a, central locking/anti-, theft warning system/IR), in instrument panel wiring harness
B154	Connection 1 (TK) (in interior wiring harness)
Q	with alarm system only
QQ	for avant ⇒ applicable avant rear wiring diagram

ws	=	white
sw	=	black
ro	=	red
br	=	brown
gn	=	green
bl	=	blue
gr	=	grey
li	=	lilac
ge	=	yellow
or	=	orange
rs	=	pink

Comfort System Central Control Module, Front Hood Switch, Radar Interior Monitoring Control Module 1

F266	Front Hood Switch
G303	Radar Interior Monitoring Control Module 1
J285	Instrument Cluster Control Module
J393	Comfort System Central Control Module
T10d	10-Pin Connector, grey, connector station A-pillar, left
T14	14-Pin Connector, black, in engine compartment, left
T16	16-Pin Connector, black, Data Link Connector (DLC), under instrument panel, left
T16i	16-Pin Connector, brown, on central control module for comfort system (used to be Connector 5)
T17f	17-Pin Connector, orange, connector station A-pillar, left
T20g	20-Pin Connector, red, on central control module for comfort system (used to be Connector 4)
T32	32-Pin Connector, blue, on instrument panel insert
T32a	32-Pin Connector, green, on instrument panel insert
12	Ground connection, in engine compartment, left
347	Ground Connection (in roof wiring harness)
A76	Wire connection (K-diagnosis wire), in instrument panel wiring harness
Q	not applicable to US/CDN

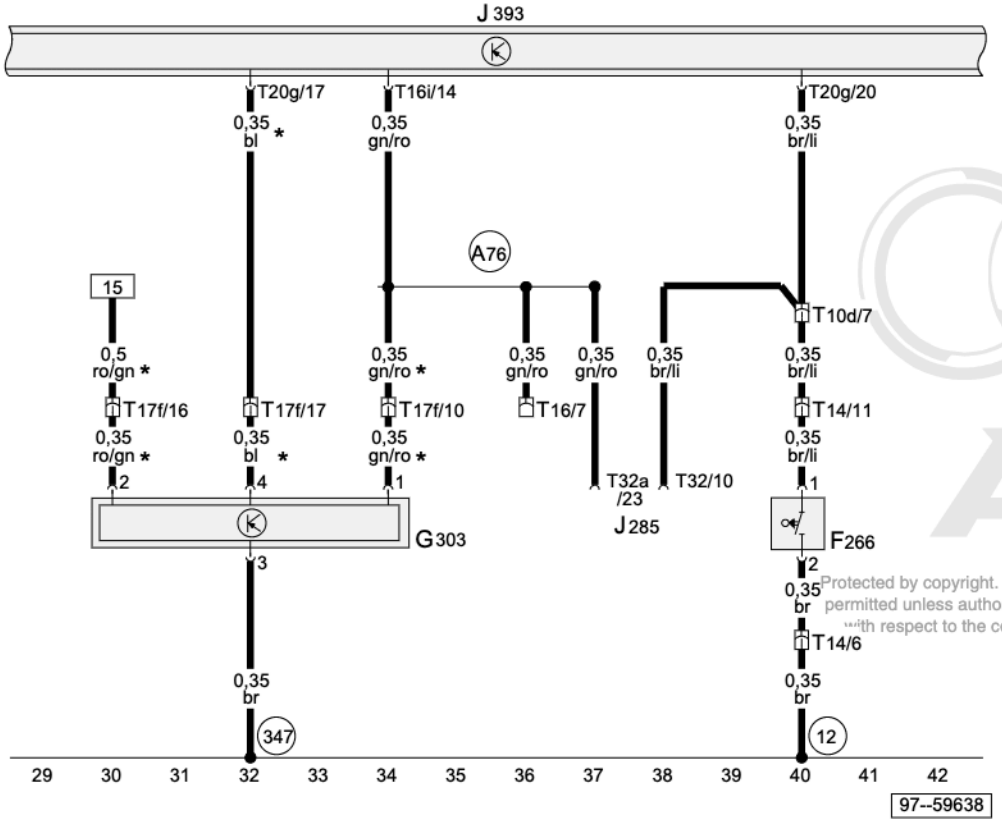

ws	=	white
sw	=	black
ro	=	red
br	=	brown
gn	=	green
bl	=	blue
gr	=	grey
li	=	lilac
ge	=	yellow
or	=	orange
rs	=	pink

Protected by copyright. Copying for private or commercial purposes, in part or in whole, is not permitted unless authorised by AUDI AG. AUDI AG does not guarantee or accept any liability with respect to the correctness of information in this document. Copyright by AUDI AG.

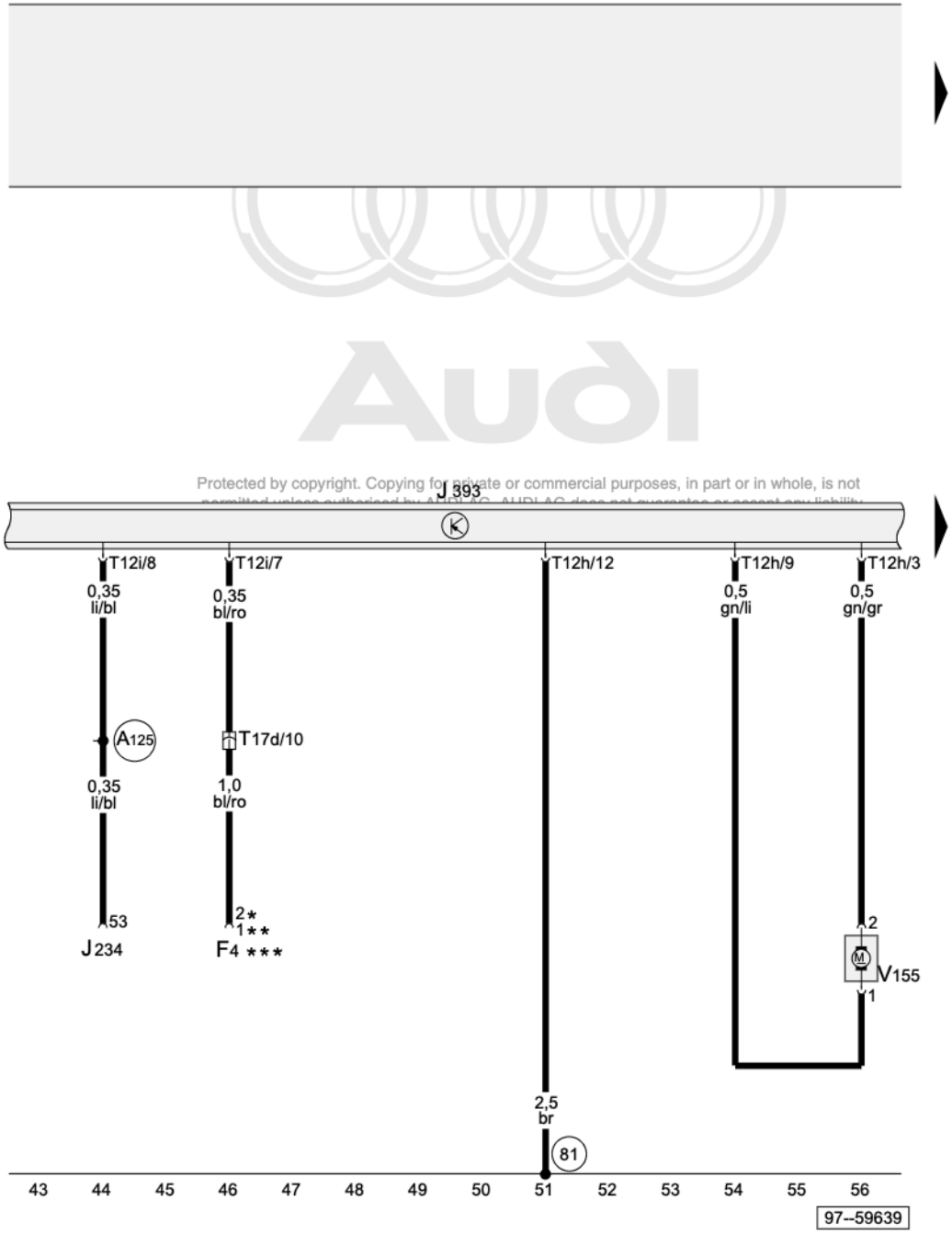

Protected by copyright. Copying for private or commercial purposes, in part or in whole, is not permitted unless authorised by AUDI AG. AUDI AG does not guarantee or accept any liability

Comfort System Central Control Module, Fuel Tank Lid Unlock Motor

F4	Back-Up Light Switch
J234	Airbag Control Module
J393	Comfort System Central Control Module
T12h	12-Pin Connector, black, on central control module for comfort system (used to be Connector 1)
T12i	12-Pin Connector, black, on central control module for comfort system (used to be Connector 3)
T17d	17-Pin Connector, red, connector station E-box, plenum chamber
V155	Fuel Tank Lid Unlock Motor
81	Ground connection -1-, in instrument panel wiring harness
A125	Wire connection (crash signal), in instrument panel wiring harness
Q	Automatic transmission (AG5) only
QQ	Automatic transmission (AG6) only
QQQ	see applicable automatic transmission (multitronic 01J, AG5 or AG6) wiring diagram

ws	=	white
sw	=	black
ro	=	red
br	=	brown
gn	=	green
bl	=	blue
gr	=	grey
li	=	lilac
ge	=	yellow
or	=	orange
rs	=	pink

Comfort System Central Control Module, Trunk Lock Alarm/ Central Locking Switch, Rear/Center Central Locking Switch

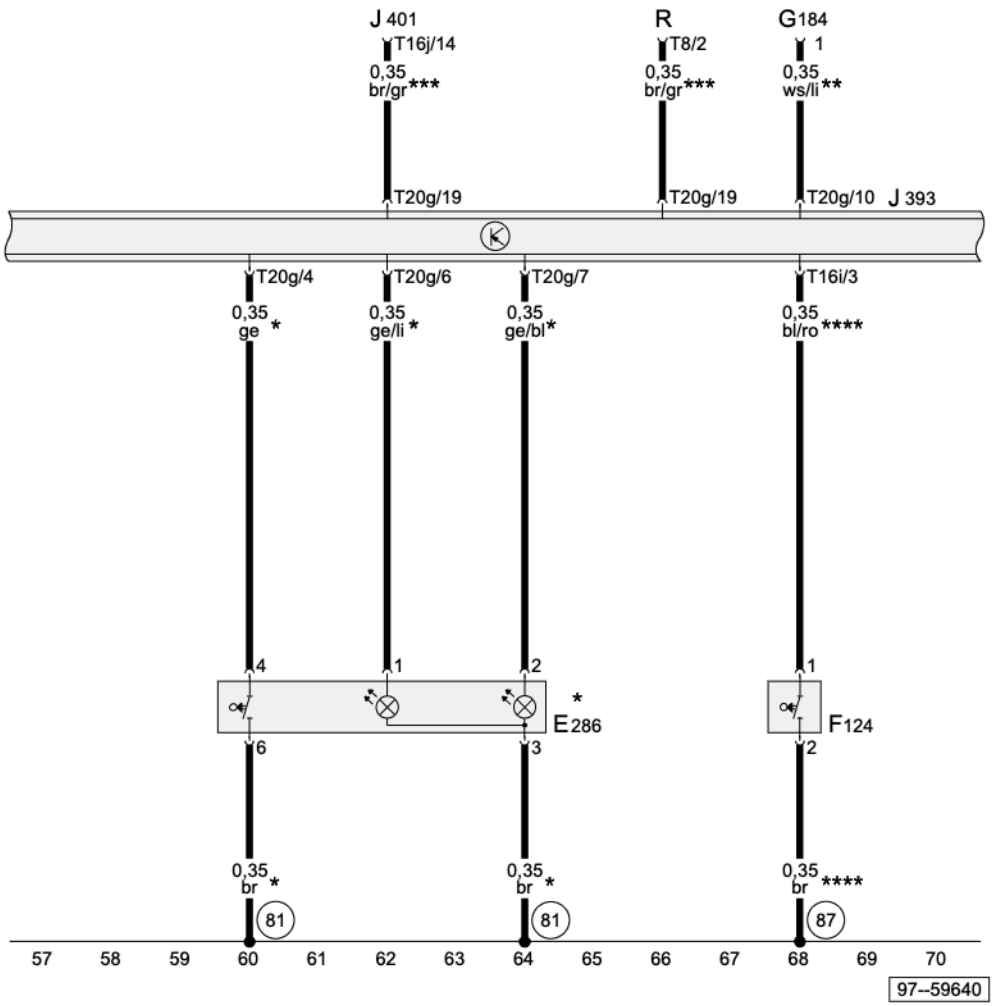

E286	Rear/Center Central Locking Switch
F124	Trunk Lock Alarm/Central Locking Switch
G184	Right Rear Window Breakage Sensor
J393	Comfort System Central Control Module
J401	Navigation System with CD Drive Control Module
R	Radio
T8	8-Pin Connector, black, radio connector III
T16i	16-Pin Connector, brown, on central control module for comfort system (used to be Connector 5)
T16j	16-Pin Connector, black, on Navigation Control Module, Connector D
T20g	20-Pin Connector, red, on central control module for comfort system (used to be Connector 4)
81	Ground connection -1-, in instrument panel wiring harness
87	Ground connection -2-, in rear wiring harness
Q	where applicable
QQ	for avant, see applicable avant rear wiring diagram
QQQ	where applicable (for alarm system)
QQQQ	sedan

ws	=	white
sw	=	black
ro	=	red
br	=	brown
gn	=	green
bl	=	blue
gr	=	grey
li	=	lilac
ge	=	yellow
or	=	orange
rs	=	pink

Protected by copyright. Copying for private or commercial purposes, in part or in whole, is not permitted unless authorised by AUDI AG. AUDI AG does not guarantee or accept any liability with respect to the correctness of information in this document. Copyright by AUDI AG.

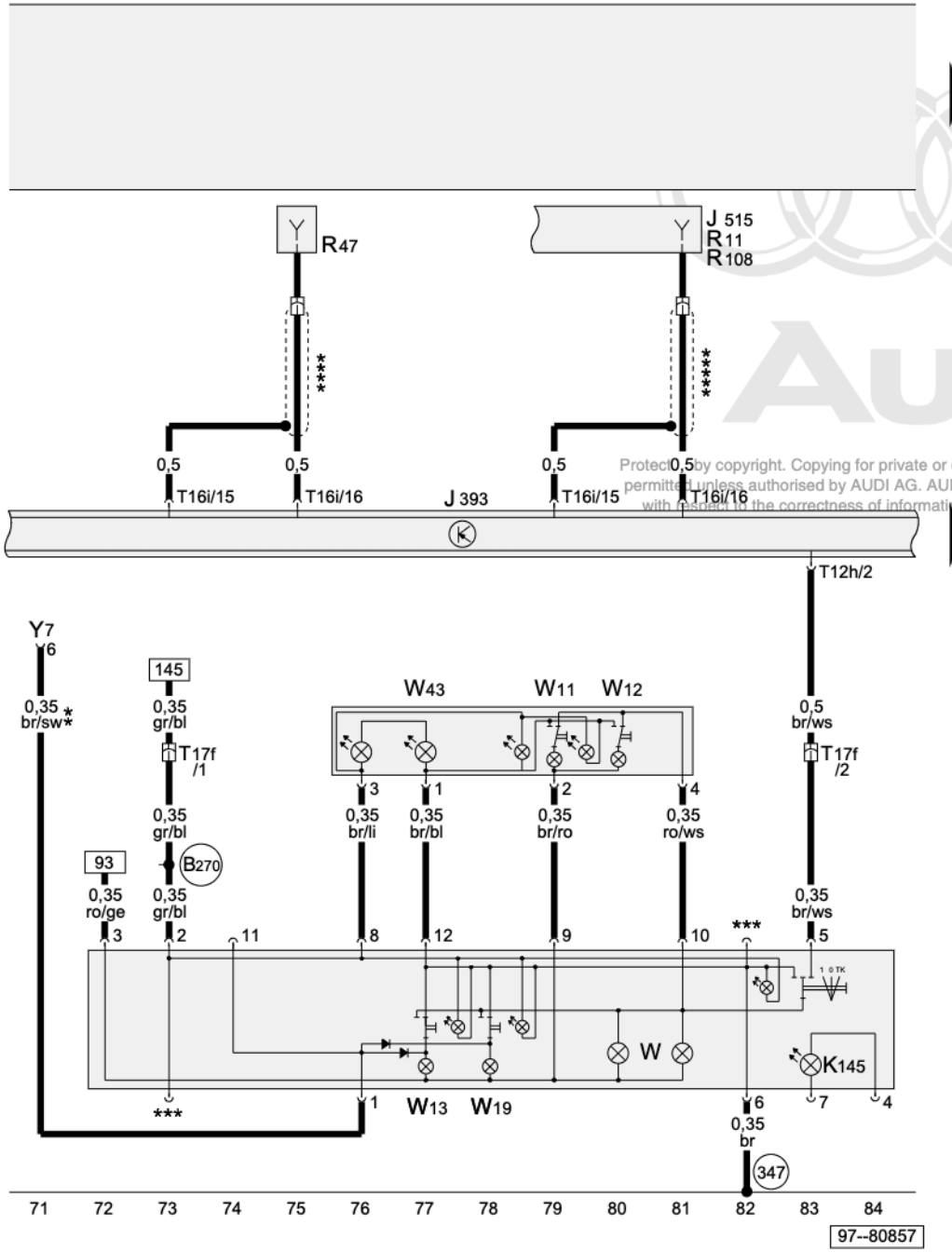

Comfort System Central Control Module, Antenna, Front Interior Light, Reading Lights

J393	Comfort System Central Control Module
J515	Antenna Selection Control Module
K145	Front Passenger's Airbag Disabled Indicator Lamp
R11	Antenna
R47	Central Locking and Anti-theft Alarm System Antenna
R108	Left Antenna Module
T12h	12-Pin Connector, black, on central control module for comfort system (used to be Connector 1)
T16i	16-Pin Connector, brown, on comfort system central control module (used to be Connector 5)
T17f	17-Pin Connector, orange, connector station A-pillar, left
W1	Front Interior Light
W11	Left Rear Reading Light
W12	Right Rear Reading Light
W13	Passenger's Map/Reading Light
W19	Left Front Reading Light
W43	Rear Courtesy Light
Y7	Automatic Day/Night Interior Mirror
347	Ground Connection (in roof wiring harness)
B270	Connector (58s), in roof wiring harness
Q	with Light Sensor (coming/leaving home function) only.
QQ	with Automatic Day/Night Interior Mirror only
QQQ	see applicable sliding / tilting sunroof wiring diagram
QQQQ	without radio only
QQQQQ	⇒ applicable wiring diagram for radio / radio navigation system / avant

ws	=	white
sw	=	black
ro	=	red
br	=	brown
gn	=	green
bl	=	blue
gr	=	grey
li	=	lilac
ge	=	yellow
or	=	orange
rs	=	pink

Protected by copyright. Copying for private or commercial purposes, in part or in whole, is not permitted unless authorised by AUDI AG. AUDI AG does not guarantee or accept any liability with respect to the correctness of information in this document. Copyright by AUDI AG.

Protected by copyright. Copying for private or commercial purposes, in part or in whole, is not permitted unless authorised by AUDI AG. AUDI AG does not guarantee or accept any liability with respect to the correctness of information in this document. Copyright by AUDI AG.

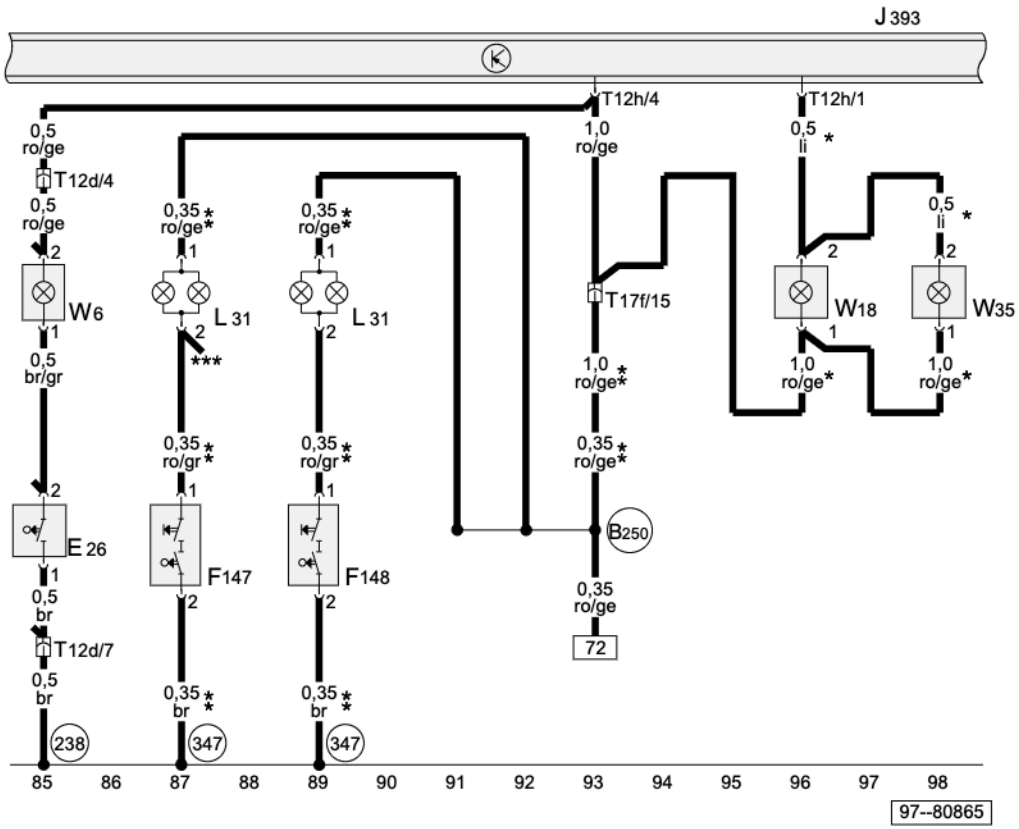

Comfort System Central Control Module, Luggage Compartment Lights, Glove Compartment Light, Make-up Mirror Lights

E26	Glove Compartment Lamp Switch
F147	Left Make-Up Mirror Light Switch
F148	Right Make-Up Mirror Light Switch
J393	Comfort System Central Control Module
L31	Make-up Mirror Illumination
T12d	12-Pin Connector, brown, near glove Compartment
T12h	12-Pin Connector, black, on central control module for comfort system (used to be Connector 1)
T17f	17-Pin Connector, orange, connector station A-pillar, left
W6	Glove Compartment Light
W18	Left Luggage Compartment Light
W35	Luggage Compartment Light, right
238	Ground connection -1-, in wiring harness interior
347	Ground connection (in roof wiring harness)
B250	Plus Connection (in roof wiring harness)
Q	for avant, see applicable avant rear wiring diagram
QQ	where applicable
QQQ	⇒ applicable Garage Door Opener wiring diagram

ws	=	white
sw	=	black
ro	=	red
br	=	brown
gn	=	green
bl	=	blue
gr	=	grey
li	=	lilac
ge	=	yellow
or	=	orange
rs	=	pink

Comfort System Central Control Module, Footwell Lights

J393	Comfort System Central Control Module
T10o	10-Pin Connector, red, seat wiring connector station, driver seat
T10p	10-Pin Connector, red, seat wiring connector station, passenger's seat
T12d	12-Pin Connector, brown, near glove Compartment
T16h	16-Pin Connector, black, on comfort system central control module (used to be Connector 2)
W9	Left Footwell Light
W10	Right Footwell Light
W45	Left Rear Footwell Light
W46	Right Rear Footwell Light
A29	wire connection (interior light), in instrument panel wiring harness
Q	where applicable

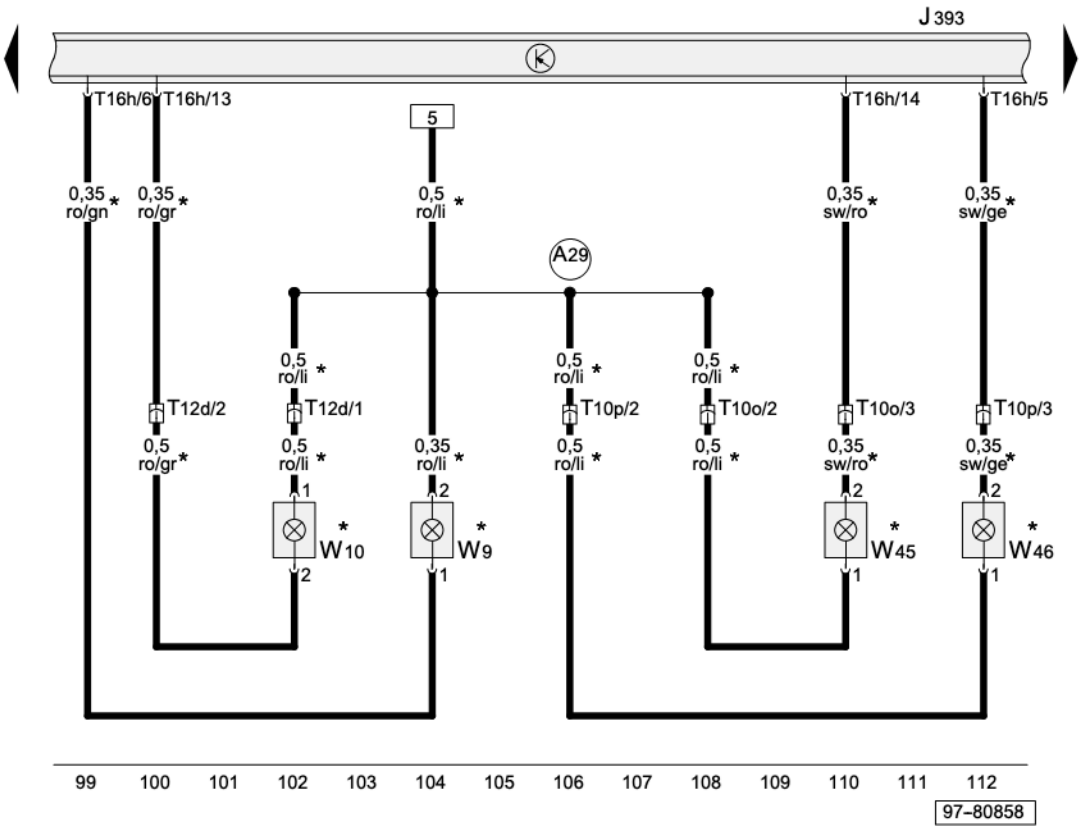

ws	=	white
sw	=	black
ro	=	red
br	=	brown
gn	=	green
bl	=	blue
gr	=	grey
li	=	lilac
ge	=	yellow
or	=	orange
rs	=	pink

Protected by copyright. Copying for private or commercial purposes, in part or in whole, is not permitted unless authorised by AUDI AG. AUDI AG does not guarantee or accept any liability with respect to the correctness of information in this document. Copyright by AUDI AG.

Comfort System Central Control Module, Left Rear Central Locking Unit

F10	Left Rear Door Contact Switch
F132	Left Rear Central Locking System Actuator
F222	Left Rear Central Locking Lock Unit
F245	Left Rear Door Central Locking -SAFE- Function Actuator
J393	Comfort System Central Control Module
T16h	16-Pin Connector, black, comfort system central control module (used to be Connector 2)
T20b	20-Pin Connector, black, door B-pillar, left
T20g	20-Pin Connector, red, on comfort system central control module (used to be Connector 4)
V115	Left Rear Central Locking System Motor
V163	Left Rear Central Locking (Safe) Motor
277	Ground connection -3-, in wiring harness interior
Q	where applicable
QQ	wihere applicable

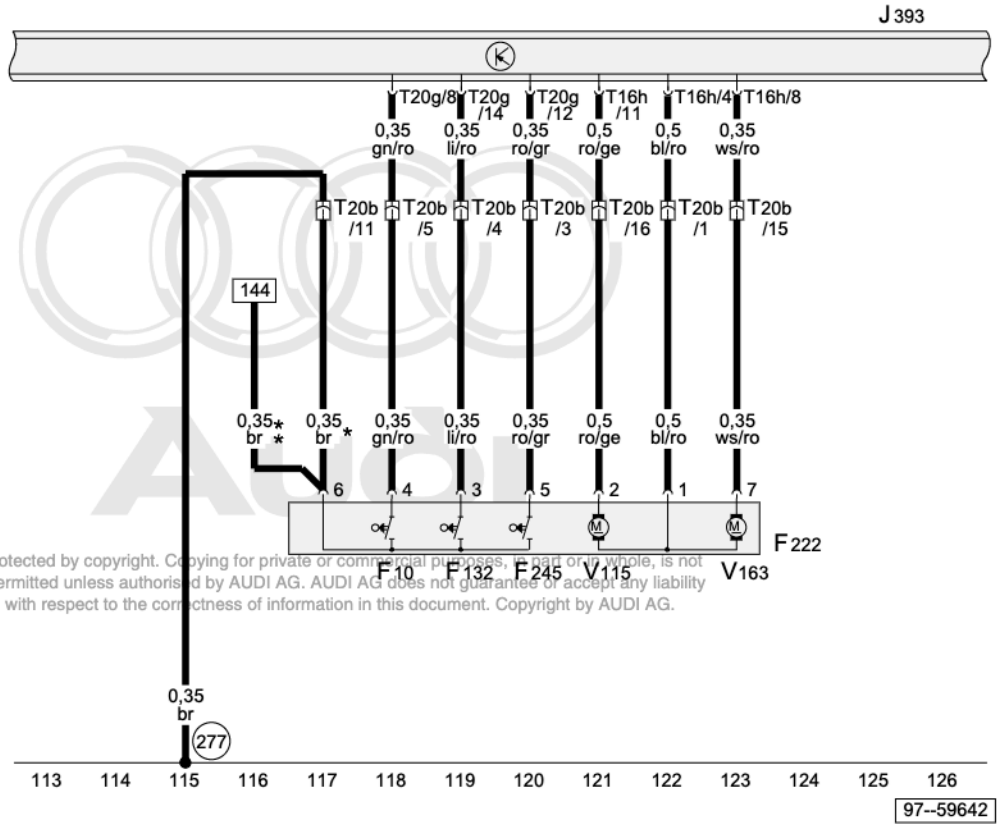

Protected by copyright. Copying for private or commercial purposes, in part or in whole, is not permitted unless authorised by AUDI AG. AUDI AG does not guarantee or accept any liability with respect to the correctness of information in this document. Copyright by AUDI AG.

ws	=	white
sw	=	black
ro	=	red
br	=	brown
gn	=	green
bl	=	blue
gr	=	grey
li	=	lilac
ge	=	yellow
or	=	orange
rs	=	pink

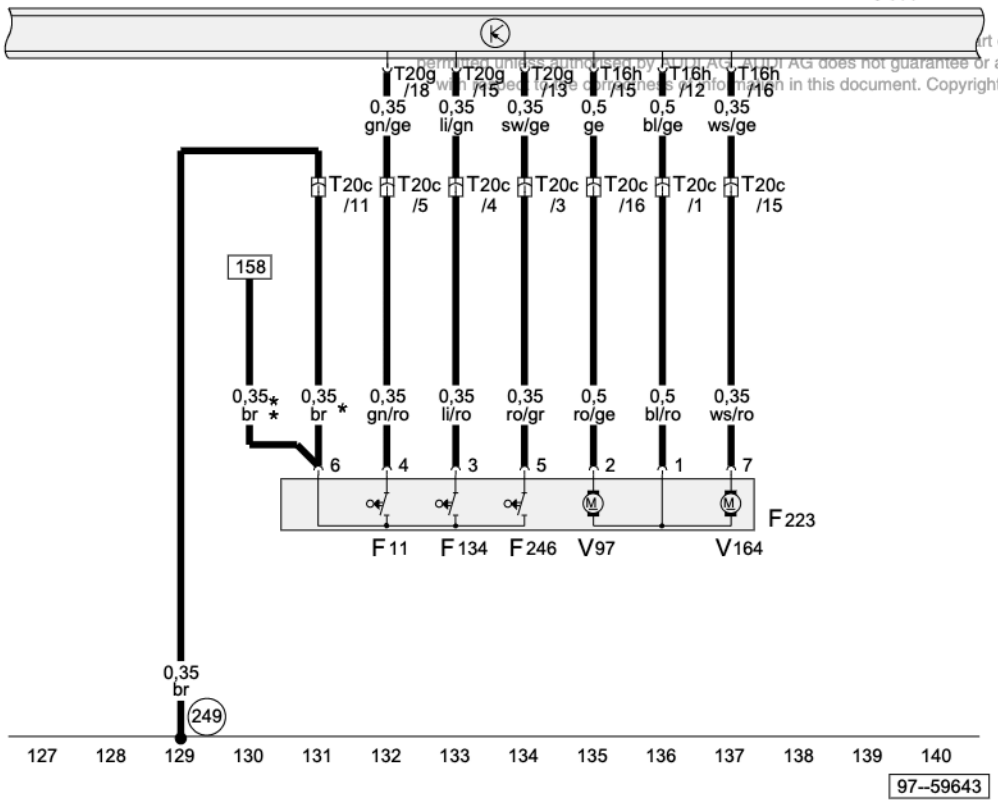

Reproduction, in whole or in part or in whole, is not permitted unless authorised by AUDI AG. AUDI AG does not guarantee or accept any liability with respect to the correctness of information in this document. Copyright by AUDI AG.

Comfort System Central Control Module, Right Rear Central Locking Unit

F11	Right Rear Door Contact Switch
F134	Right Rear Central Locking System Actuator
F223	Right Rear Central Locking Lock Unit
F246	Right Rear Door Centarl Locking -SAFE- Function Actuator
J393	Comfort System Central Control Module
T16h	16-Pin Connector, black, on comfor system central control module (used to be Connector 2)
T20c	20-Pin Connector, black, door B-pillar, right
T20g	20-Pin Connector, red, on central control module for comfort system (used to be Connector 4)
V97	Double Cab Right Rear Door Central Locking System Motor
V164	Right Rear Central Locking (Safe) Motor
249	Ground connection -2-, in wiring harness interior
Q	where applicable
QQ	where applicable

ws	=	white
sw	=	black
ro	=	red
br	=	brown
gn	=	green
bl	=	blue
gr	=	grey
li	=	lilac
ge	=	yellow
or	=	orange
rs	=	pink

Comfort Sytem Central Control Module, Left Rear Door Entry/ Warning Lights, Left Rear Door Opener Illumination

J285	Instrument Cluster Control Module
J393	Comfort System Central Control Module
L110	Left Rear Door Opener Illumination
T4p	4-Pin Connector, black, in the door, rear, left
T16h	16-Pin Connector, black, on comfor system central control module (used to be Connector 2)
T20b	20-Pin Connector, black, door B-pillar, left
T32a	32-Pin Connector, green, on instrument panel insert
W33	Left Rear Entry Light
W37	Left Rear Door Warning Light
277	Ground connector -3-, in wiring harness interior
A175	Wire connection (58s), in instrument panel wiring harness
Q	where applicable

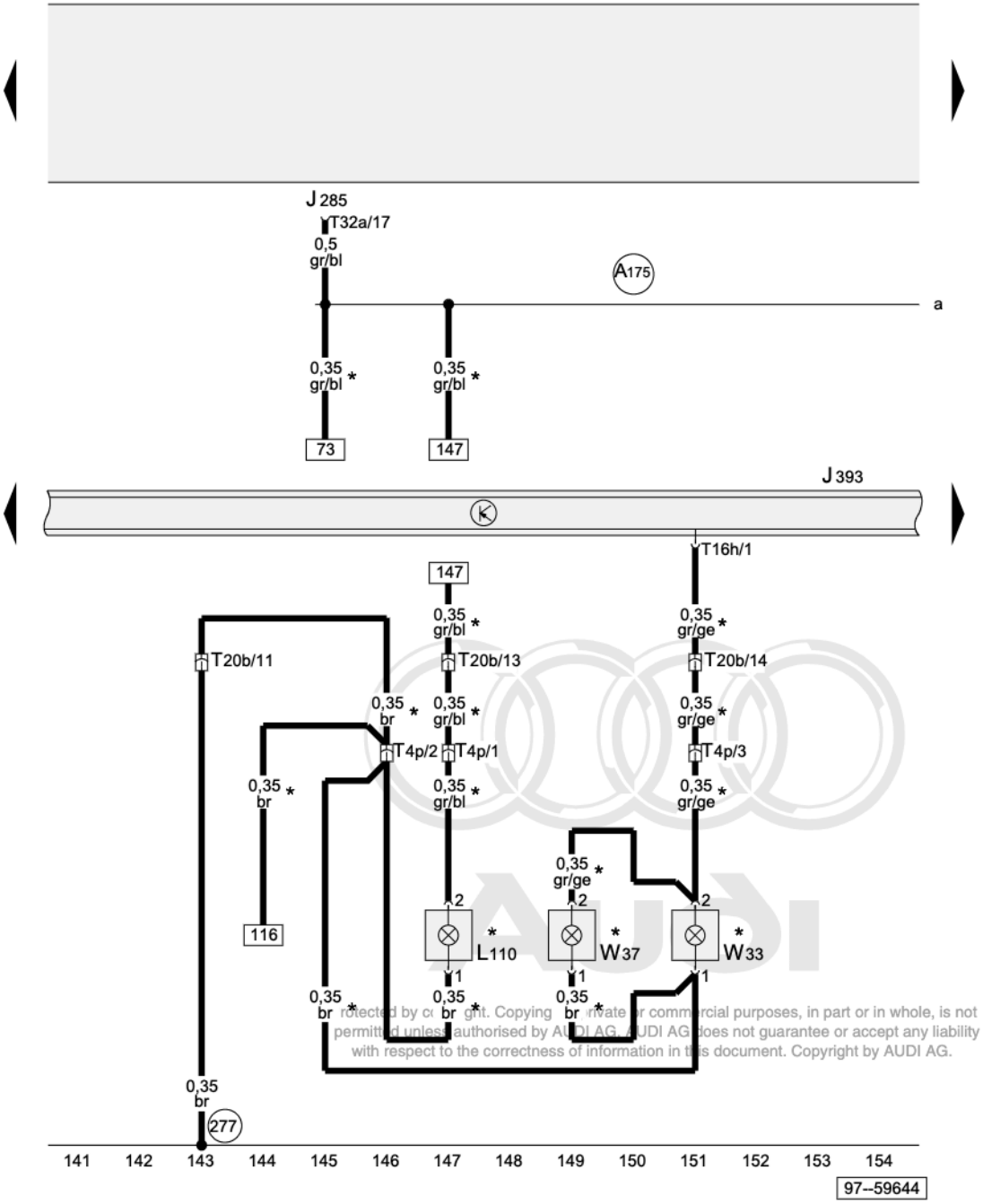

Protected by copyright. Copying for private or commercial purposes, in part or in whole, is not permitted unless authorised by AUDI AG. AUDI AG does not guarantee or accept any liability with respect to the correctness of information in this document. Copyright by AUDI AG.

ws	=	white
sw	=	black
ro	=	red
br	=	brown
gn	=	green
bl	=	blue
gr	=	grey
li	=	lilac
ge	=	yellow
or	=	orange
rs	=	pink

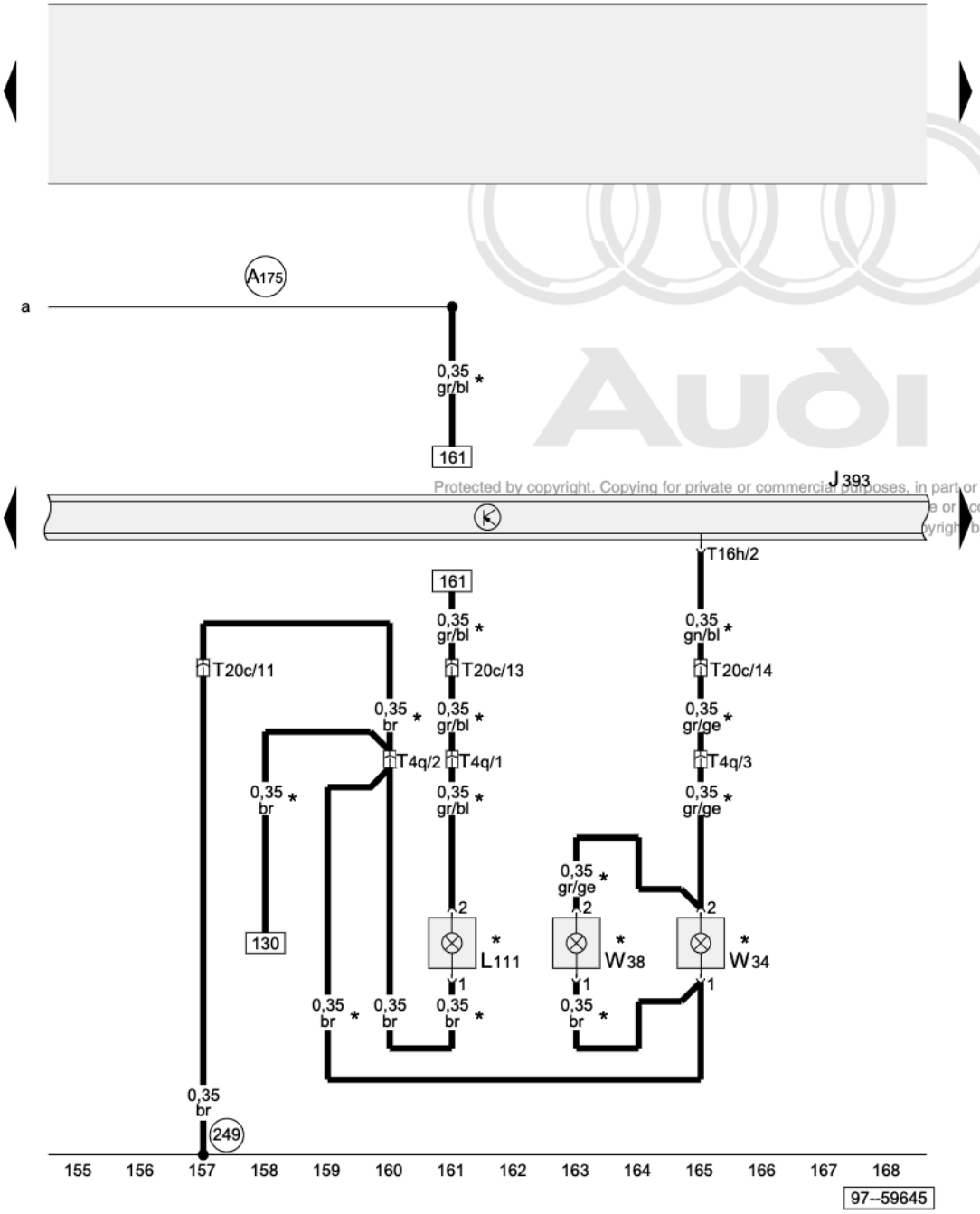

Protected by copyright. Copying for private or commercial purposes, in part or in whole, is not permitted unless authorised by AUDI AG. AUDI AG does not guarantee or accept any liability with respect to the correctness of information in this document. Copyright by AUDI AG.

Comfort System Central Control Module, Right Rear Rear Door Entry/Warning Lights, Right Rear Door Opener Illumination

J393	Comfort System Central Control Module
L111	Right Rear Door Opener Illumination
T4q	4-Pin Connector, black, in the door, rear, right
T16h	16-Pin Connector, black, on comfort system central control (used to be Connector 2)
T20c	20-Pin Connector, black, door B-pillar, right
W34	Right Rear Entry Light
W38	Right Rear Door Warning Light
249	Ground Connection 2 (in interior wiring harness)
A175	Wire connection (58s), in instrument panel wiring harness
Q	where applicable

ws	=	white
sw	=	black
ro	=	red
br	=	brown
gn	=	green
bl	=	blue
gr	=	grey
li	=	lilac
ge	=	yellow
or	=	orange
rs	=	pink

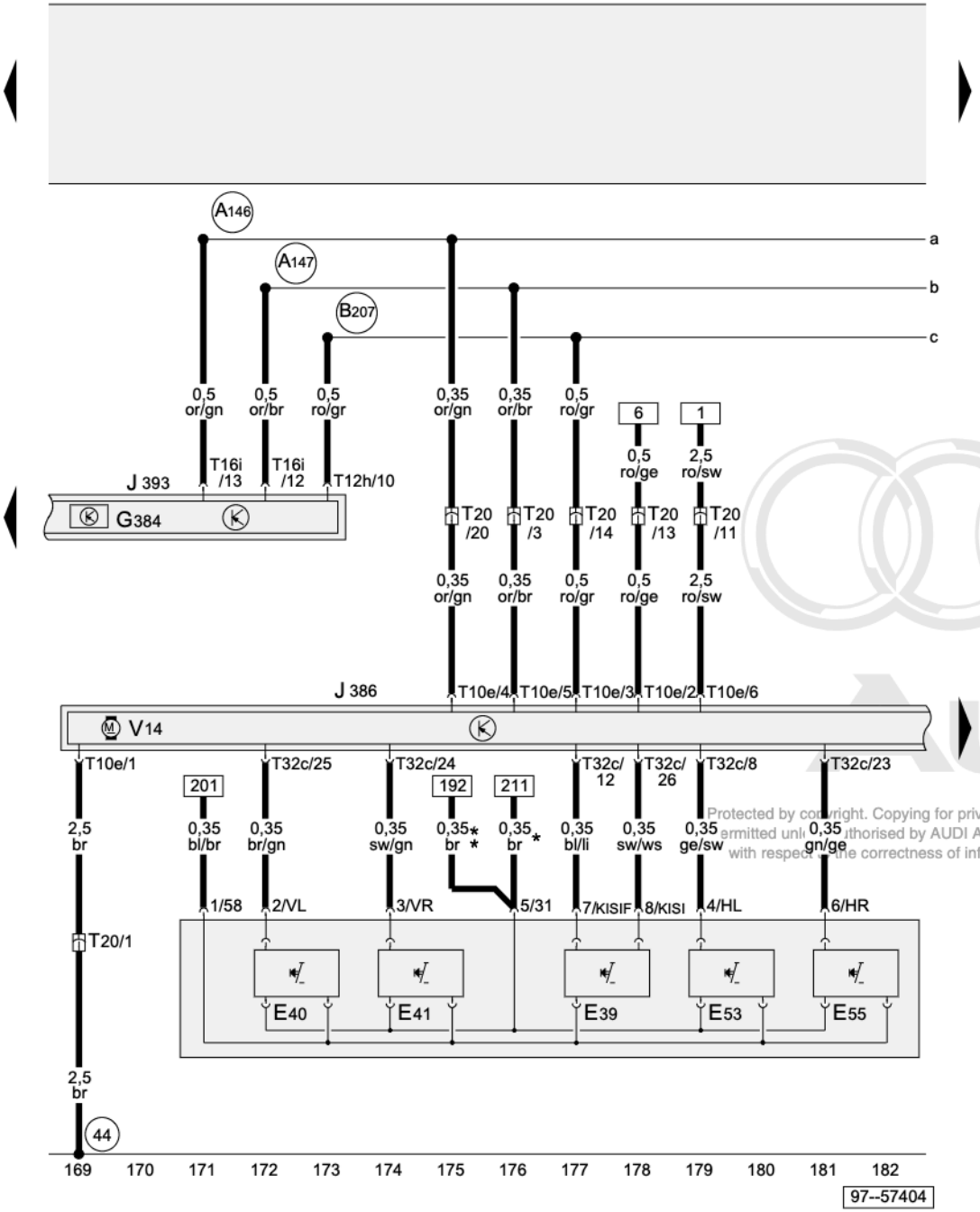

Comfort System Central Control Module, Driver's Door Control Module, Window Regulator Switches

E39	Rear Window Regulator Safety Switch
E40	Left Front Window Regulator Switch
E41	Right Front Window Regulator Switch
E53	Driver's Left Rear Window Regulator Switch
E55	Driver's Right Rear Window Regulator Switch
G384	Vehicle Inclination SensorQ
J386	Driver's Door Control Module
J393	Comfort System Central Control Module
T10e	10-Pin Connector, black, on driver's door control module
T12h	12-Pin Connector, black, on comfort system central control module (used to be Connector 1)
T16i	16-Pin Connector, brown, on comfort system central control module (used to be Connector 5)
T20	20-Pin Connector, black, door A-pillar, left
T32c	32-Pin Connector, grey, or driver's door control module
V14	Left Window Regulator Motor
44	Ground connection (lower left A-pillar)
A146	Comfort System High-bus Connection (in instrument panel wiring harness)
A147	Comfort System Low-bus Connection (in instrument panel wiring harness)
B207	Connection (comfort), in passenger compartment wiring harness
Q	where applicable
QQ	where applicable

Protected by copyright. Copying for private or commercial purposes, in part or in whole, is not permitted unless authorised by AUDI AG. AUDI AG does not guarantee or accept any liability with respect to the correctness of information in this document. Copyright by AUDI AG.

ws	=	white
sw	=	black
ro	=	red
br	=	brown
gn	=	green
bl	=	blue
gr	=	grey
li	=	lilac
ge	=	yellow
or	=	orange
rs	=	pink

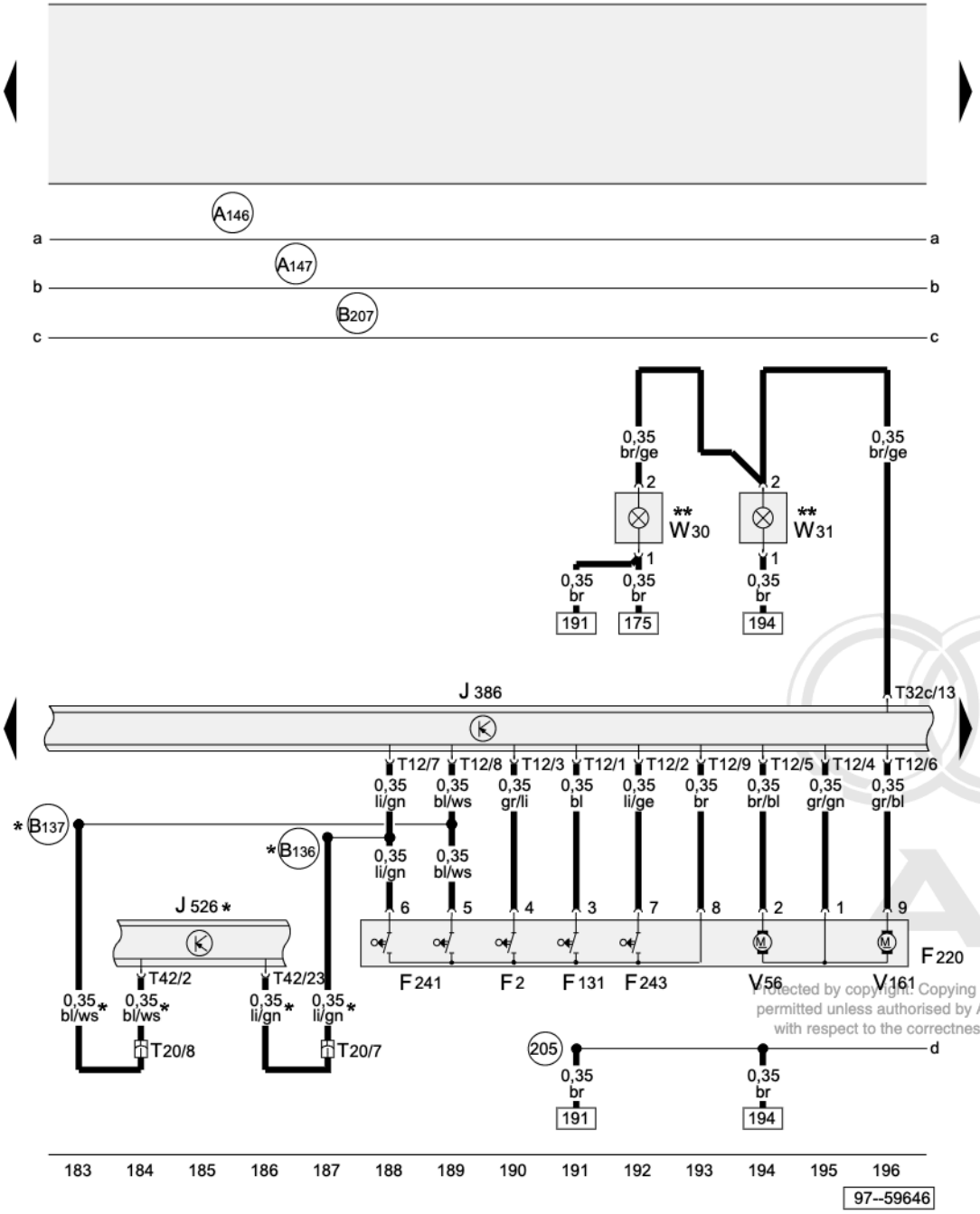

Driver's Door Control Module, Driver's Door Locking Actuators/Switches/Motors, Left Window Regulator Motor, Driver's Door Warning/Entry Lights

F2	Driver's Door Contact Switch
F131	Left Front Central Locking System Actuator
F220	Driver's Door Central Locking Lock Unit
F241	Driver's Lock Cylinder Contact Switch
F243	Driver's Door Central Locking -SAFE- Function Actuator
J386	Driver's Door Ccontrol Module
J526	Telephone/Telematic Control Module
T12	12-Pin Connector, black, on driver's door control module
T20	20-Pin Connector, black, door A-pillar, left
T32c	32-Pin Connector, grey, or driver's door control module
T42	42-Pin Connector, blue, on Telephone Transceiver
V56	Driver's Door Central Locking System Motor
V161	Driver's Door Central Locking (Safe) Motor
W30	Driver's Door Warning Light
W31	Left Front Entry Light
205	Ground connection, in driver's door wiring harness
A146	Comfort System High-bus Connection (in instrument panel wiring harness)
A147	Comfort System Low-bus Connection (in instrument panel wiring harness)
B136	Connector (open-comfort system), in interior wiring harness window regulator
B137	Connector (closed-comfort system), in interior wiring harness window regulator
B207	Connection (comfort), in passenger compartment wiring harness
Q	where applicable

Protected by copyright. Copying for private or commercial purposes, in part or in whole, is not permitted unless authorised by AUDI AG. AUDI AG does not guarantee or accept any liability with respect to the correctness of information in this document. Copyright by AUDI AG.

ws	=	white
sw	=	black
ro	=	red
br	=	brown
gn	=	green
bl	=	blue
gr	=	grey
li	=	lilac
ge	=	yellow
or	=	orange
rs	=	pink

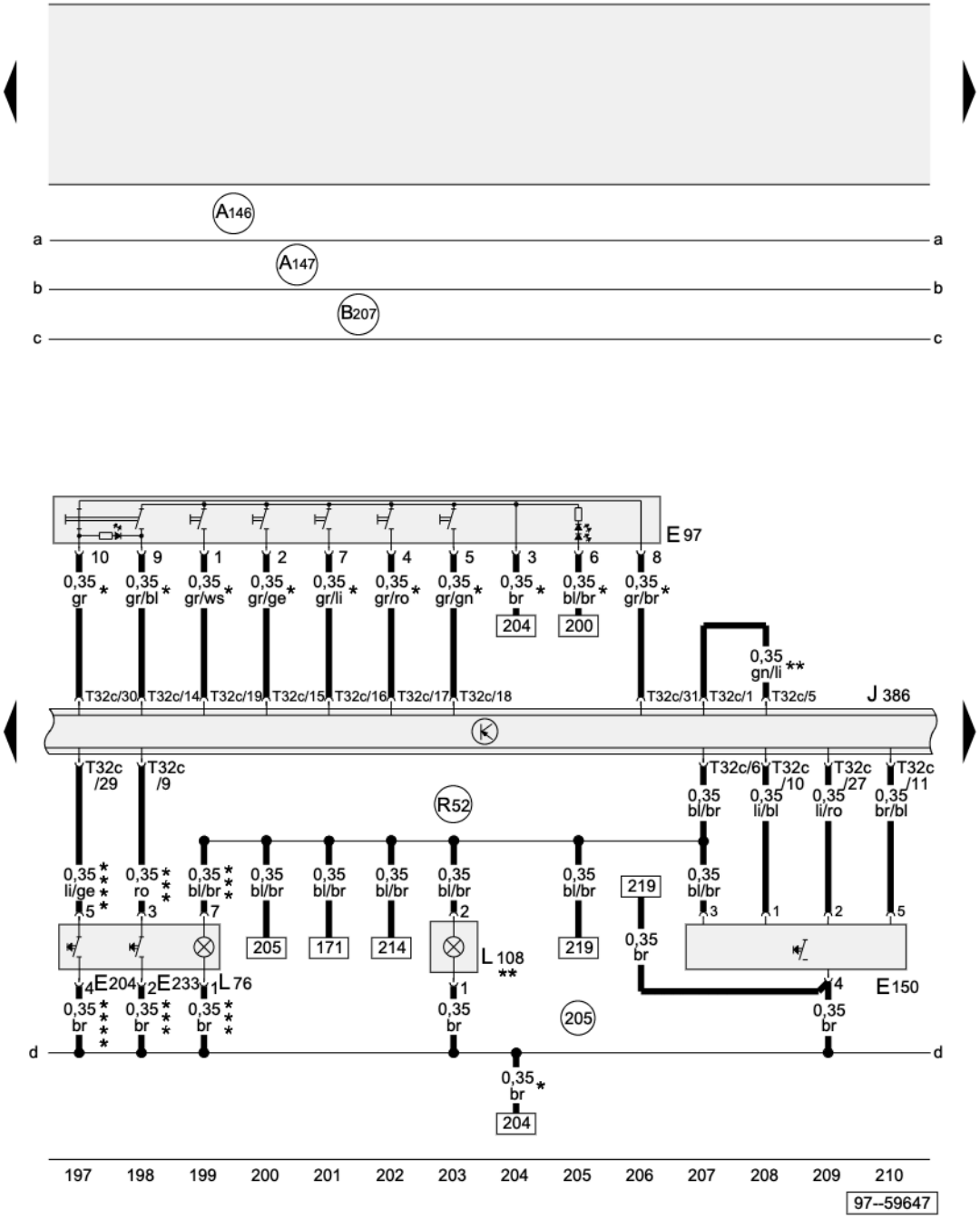

Driver's Door Control Module, Driver's Interior Locking Switch, Driver's Seat Memory Program Control, Driver's Door Opener Illumination, Remote Fuel Tank Flap Switch

E97	Driver's Seat Memory Program Control
E150	Driver's Interior Locking Switch
E204	Remote Fuel Tank Flap Switch
E233	Rear Lid Remote Control Lock Switch
J386	Driver's Door Control Module
L76	Push Button Light
L108	Driver's Door Opener Illumination
T32c	32-Pin Connector, grey, on driver's door control module
205	Ground connection, in driver's door wiring harness
A146	Comfort System High-bus Connection (in instrument panel wiring harness)
A147	Comfort System Low-bus Connection (in instrument panel wiring harness)
B207	Connection (comfort), in passenger compartment wiring harness
R52	Connection (58s) (in left front door wiring harness)
Q	with power seats with memory function only
QQ	where applicable

ws	=	white
sw	=	black
ro	=	red
br	=	brown
gn	=	green
bl	=	blue
gr	=	grey
li	=	lilac
ge	=	yellow
or	=	orange
rs	=	pink

Protected by copyright. Copying for private or commercial purposes, in part or in whole, is not permitted unless authorised by AUDI AG. AUDI AG does not guarantee or accept any liability with respect to the correctness of information in this document. Copyright by AUDI AG.

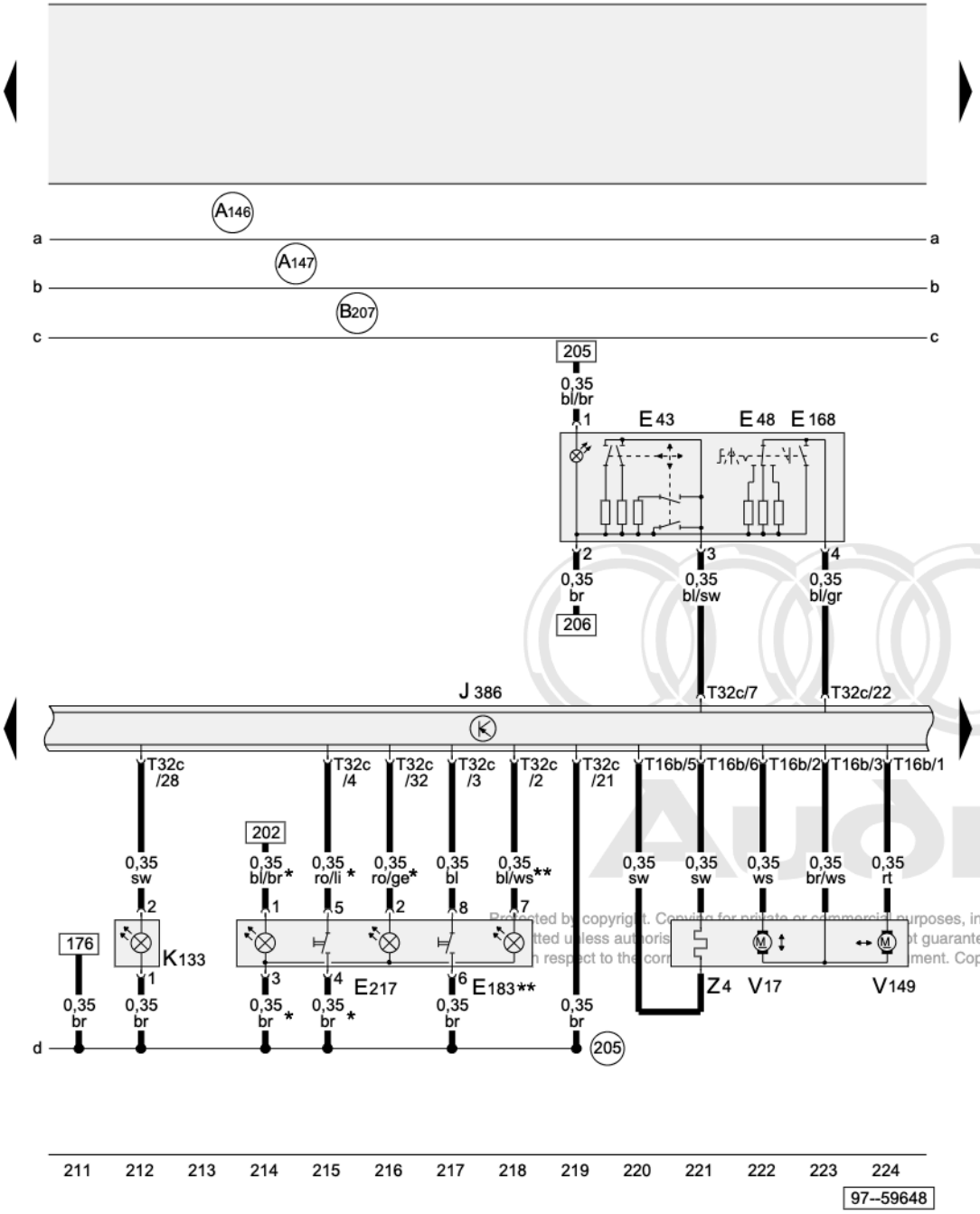

Driver's Door Control Module, Driver's Mirror Switches, Driver's Mirror Motors (mirror without fold-in function)

E43	Mirror Adjustment Switch
E48	Mirror Selector Switch
E168	Mirror (with fold-away function) Switch
E183	Passenger Compartment Monitoring SwitchQ
E217	Alarm System -Off- SwitchQ
J386	Driver's Door Control Module
K133	Central Locking -SAFE- Indicator Lamp
T16b	16-Pin Connector, on driver's door control module
T32c	32-Pin Connector, grey, on driver's door control module
V17	Driver's Mirror Adjustment Motor (vertical)
V149	Driver's Mirror Adjustment Motor (horizontal)
Z4	Driver's Heated Outside Mirror
205	Ground connection, in driver's door wiring harness
A146	Comfort System High-bus Connection (in instrument panel wiring harness)
A147	Comfort System Low-bus Connection (in instrument panel wiring harness)
B207	Connection (comfort), in passenger compartment wiring harness
Q	where applicable
QQ	mirror without fold-in function

ws	=	white
sw	=	black
ro	=	red
br	=	brown
gn	=	green
bl	=	blue
gr	=	grey
li	=	lilac
ge	=	yellow
or	=	orange
rs	=	pink

Protected by copyright. Copying for private or commercial purposes, in part or in whole, is not permitted unless authorised. We do not guarantee or accept any liability with respect to the correctness of information. Copyright by AUDI AG.

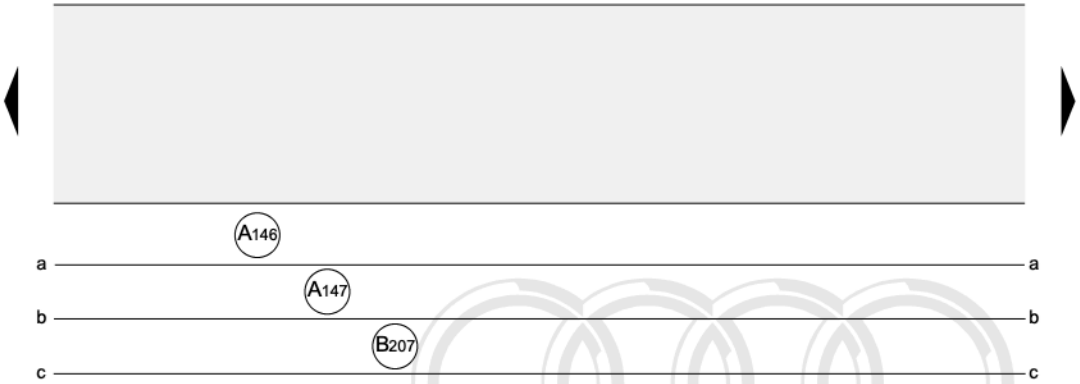

Driver's Door Control Module, Driver's Mirror Motors (mirror with fold-in function)

J386	Driver's Door Control Module
T16b	16-Pin Connector, on driver's door control module
V17	Driver's Mirror Adjustment Motor (vertical)
V121	Driver's Mirror Fold-in Motor
V149	Driver's Mirror Adjustment Motor (horizontal)
Z4	Driver's Heated Outside Mirror
A146	Comfort System High-bus Connection (in instrument panel wiring harness)
A147	Comfort System Low-bus Connection (in instrument panel wiring harness)
B207	Connection (comfort), in passenger compartment wiring harness

Protected by copyright. Copying for private or commercial purposes, in part or in whole, is not permitted unless authorised by AUDI AG. AUDI AG does not guarantee or accept any liability with respect to the correctness of information in this document. Copyright by AUDI AG.

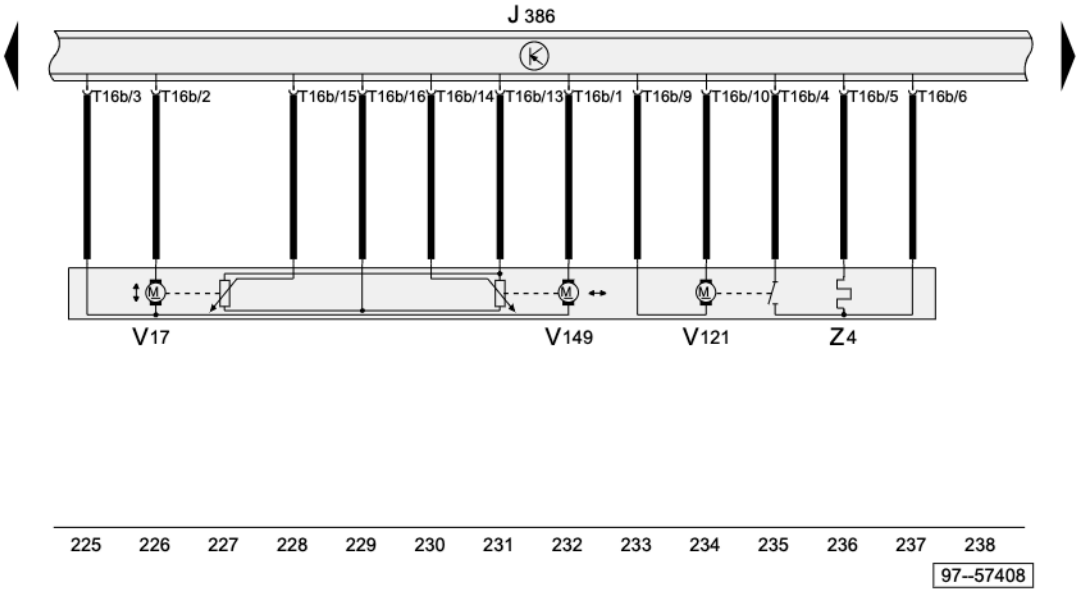

ws	=	white
sw	=	black
ro	=	red
br	=	brown
gn	=	green
bl	=	blue
gr	=	grey
li	=	lilac
ge	=	yellow
or	=	orange
rs	=	pink

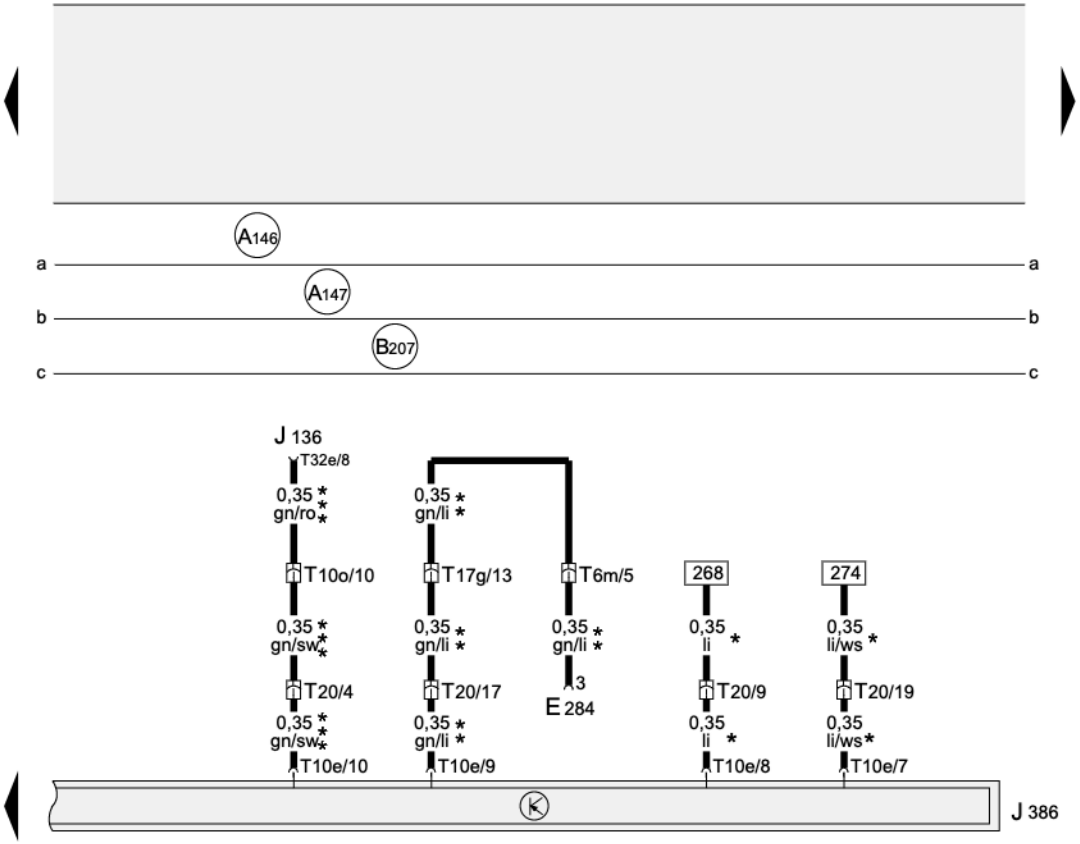

Driver's Door Control Module, Garage Door Opener Control Head, Memory Seat Control Module

E284	Garage Door Opener Control Head
J136	Memory Seat Control Module
J386	Driver's Door Control Module
T6m	6-Pin Connector, on Garage Door Opener Control Head
T10e	10-Pin Connector, black, on driver's door control module
T10o	10-Pin Connector, red, seat wiring connector station, driver seat
T17g	17-Pin Connector, dark brown, connector station A-pillar, left
T20	20-Pin Connector, black, door A-pillar, left
T32e	32-Pin Conenctor, Memory power Seat Control module
A146	Comfort System High-bus Connection (in instrument panel wiring harness)
A147	Comfort System Low-bus Connection (in instrument panel wiring harness)
B207	Connection (comfort), in passenger compartment wiring harness
Q	with Automatic Day/Night Interior Mirror only
QQ	with Garage Door Opener only
QQQ	with power seat with memory function only

Protected by Copyright. Copying for private or commercial purposes, in part or in whole, is not permitted unless authorised by AUDI AG. AUDI AG does not guarantee or accept any liability with respect to the correctness of information in this document. Copyright by AUDI AG.

239 240 241 242 243 244 245 246 247 248 249 250 251 252

97--59649

ws	=	white
sw	=	black
ro	=	red
br	=	brown
gn	=	green
bl	=	blue
gr	=	grey
li	=	lilac
ge	=	yellow
or	=	orange
rs	=	pink

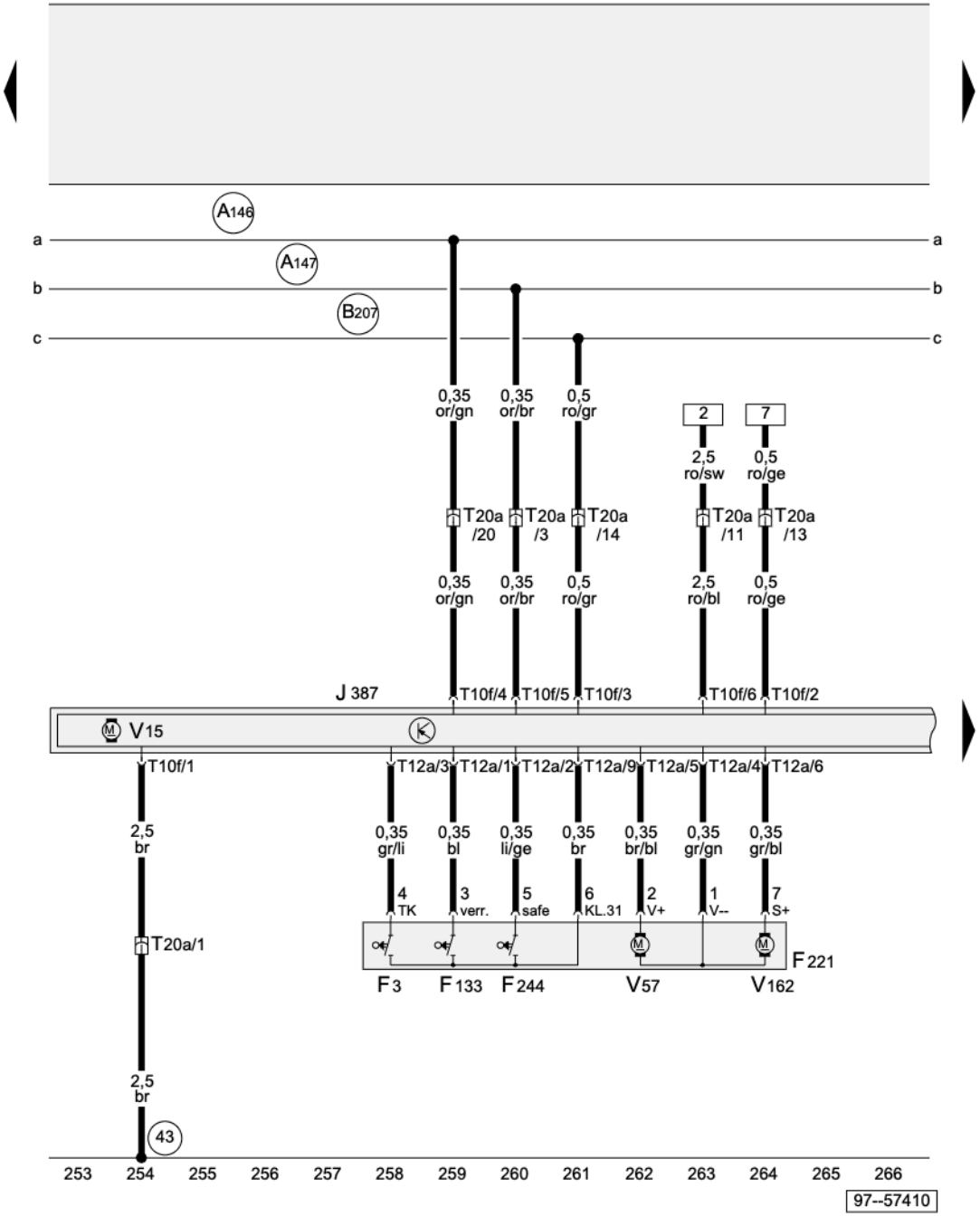

Front Passenger's Door Control Module, Front Passenger's Door Central Locking Actuators/Switches/Motors, Right Window Regulator Motor

F3	Front Passenger's Door Contact Switch
F133	Right Front Central Locking System Actuator
F221	Front Passenger's Door Central Locking Lock Unit
F244	Front Passenger's Door Central Locking -SAFE- Function Actuator
J387	Front Passenger's Door Control Module
T10f	10-Pin Connector, black, on front passenger's door control module
T12a	12-Pin Connector, black, on front passenger's door control module
T20a	20-Pin Connector, black, door A-pillar, right
V15	Right Window Regulator Motor
V57	Passenger's Door Central Locking System Motor
V162	Front Passenger's Central Locking (Safe) Motor
43	Ground connection (lower right A-pillar)
A146	Comfort System High-bus Connection (in instrument panel wiring harness)
A147	Comfort System Low-bus Connection (in instrument panel wiring harness)
B207	Connection (comfort), in passenger compartment wiring harness

Protected by copyright. Copying for private or commercial purposes, in part or in whole, is not permitted unless authorised by AUDI AG. AUDI AG does not guarantee or accept any liability with respect to the correctness of information in this document. Copyright by AUDI AG.

ws	=	white
sw	=	black
ro	=	red
br	=	brown
gn	=	green
bl	=	blue
gr	=	grey
li	=	lilac
ge	=	yellow
or	=	orange
rs	=	pink

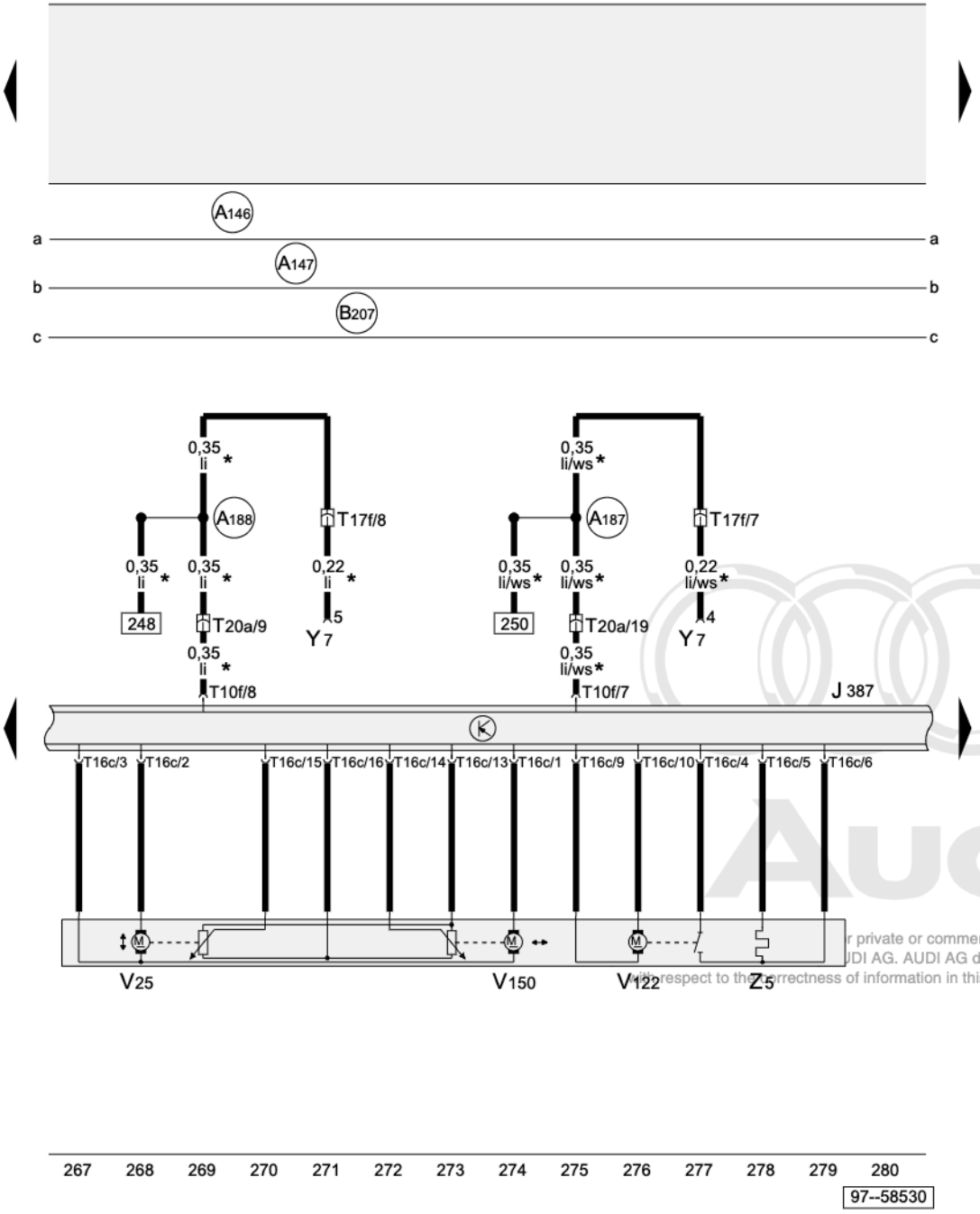

Front Passenger's Door Control Module, Front Passenger's Mirror Motors (mirror with fold-in function)

J387	Front Passenger's Door Control Module
T10f	10-Pin Connector, black, on front passenger's door control module
T16c	16-Pin Connector, on front passenger's door control module
T17f	17-Pin Connector, orange, connector station A-pillar, left
T20a	20-Pin Connector, black, door A-pillar, right
V25	Front Passenger's Mirror Adjustment Motor (vertical)
V122	Front Passenger's Mirror Fold-in Motor
V150	Front Passenger's Mirror Adjustment Motor (horizontal)
Y7	Automatic Day/Night Interior Mirror
Z5	Front Passenger's Heated Outside Mirror
A146	Comfort System High-bus Connection (in instrument panel wiring harness)
A147	Comfort System Low-bus Connection (in instrument panel wiring harness)
A187	Automatic Day/Night Interior Mirror Connection 1 (in instrument panel wiring harness)
A188	Automatic Day/Night Interior Mirror Connection 1 (in instrument panel wiring harness)
B207	Connection (comfort), in passenger compartment wiring harness
Q	with Automatic Day/Night Interior Mirror only

r private or commercial purposes, in part or in whole, is not
UDI AG. AUDI AG does not guarantee or accept any liability
with respect to the correctness of information in this document. Copyright by AUDI AG.

ws	=	white
sw	=	black
ro	=	red
br	=	brown
gn	=	green
bl	=	blue
gr	=	grey
li	=	lilac
ge	=	yellow
or	=	orange
rs	=	pink

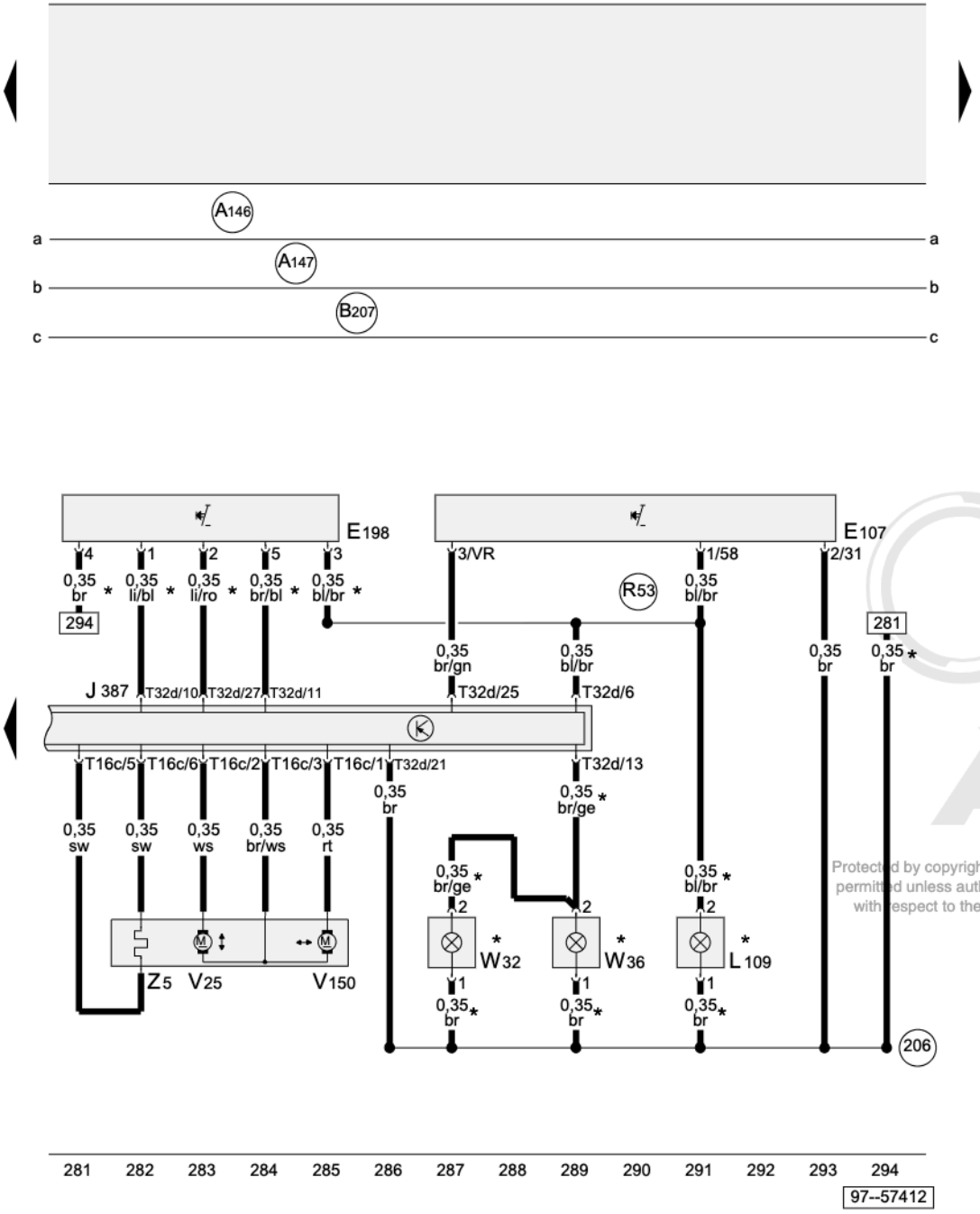

Front Passenger's Door Control Module, Front Passenger's Mirror Motors (mirror without fold-in function), Front Passenger's Door Warning/Entry Lights

E107	Window Regulator Switch (in RF door)
E198	Front Passenger's Interior Lock Switch
J387	Front Passenger's Door Control Module
L109	Front Passenger's Door Opener Illumination
T16c	16-Pin Connector, on front passenger's door control module
T32d	32-Pin Connector, grey, on front passenger's door control module
V25	Front Passenger's Mirror Adjustment Motor (vertical)
V150	Front Passenger's Mirror Adjustment Motor
W32	Right Front Entry Light
W36	Front Passenger's Door Warning Light
Z5	Front Passenger's Heated Outside Mirror
206	Ground connection, in passenger's door wiring harness
A146	Comfort System High-bus Connection (in instrument panel wiring harness)
A147	Comfort System Low-bus Connection (in instrument panel wiring harness)
B207	Connection (comfort), in passenger compartment wiring harness
R53	Connection (58s) (in right front door wiring harness)

Protected by copyright. Copying for private or commercial purposes, in part or in whole, is not permitted unless authorised by AUDI AG. AUDI AG does not guarantee or accept any liability with respect to the correctness of information in this document. Copyright by AUDI AG.

ws	=	white
sw	=	black
ro	=	red
br	=	brown
gn	=	green
bl	=	blue
gr	=	grey
li	=	lilac
ge	=	yellow
or	=	orange
rs	=	pink

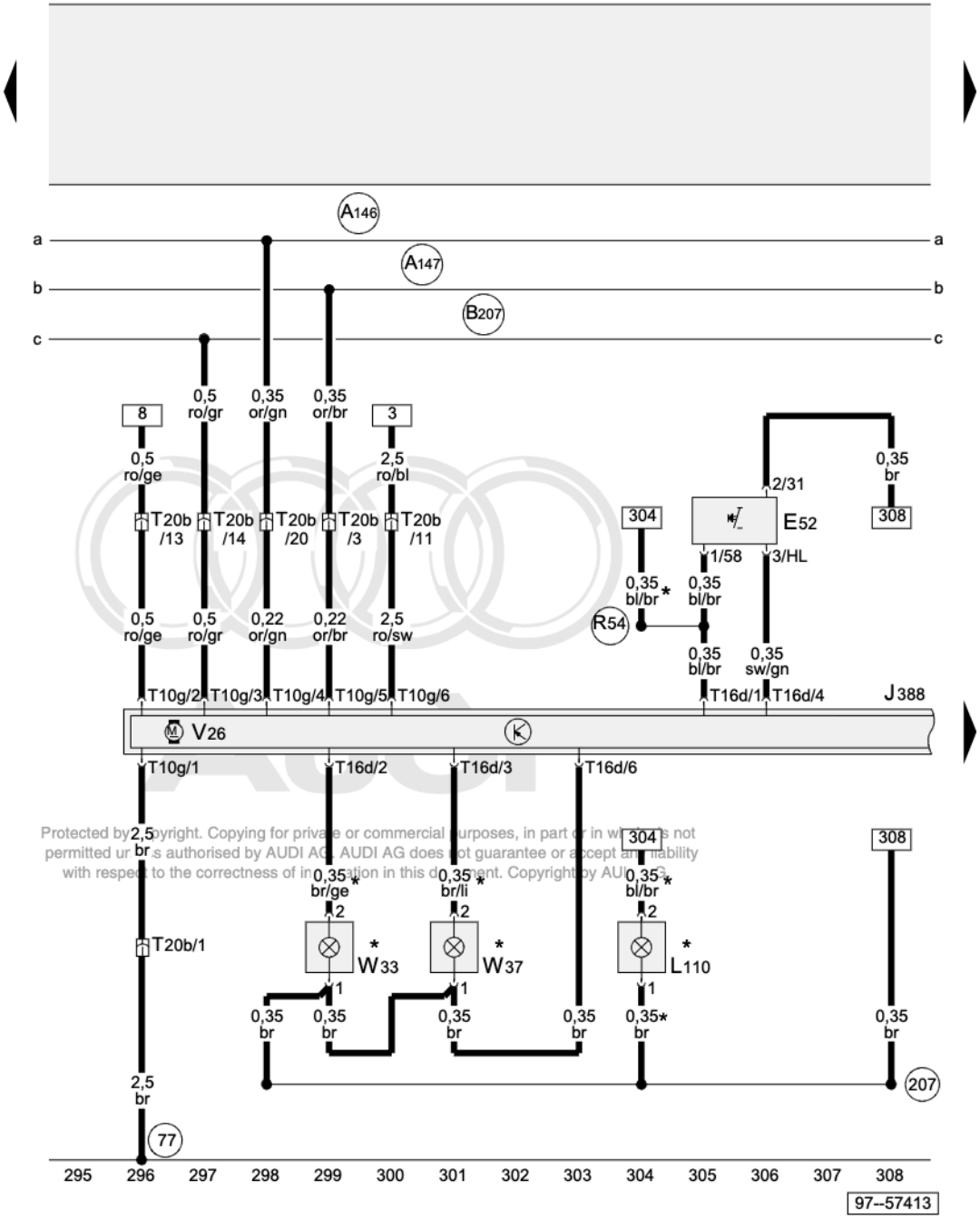

Protected by copyright. Copying for private or commercial purposes, in part or in whole is not permitted unless authorised by AUDI AG. AUDI AG does not guarantee or accept any liability with respect to the correctness of information in this document. Copyright by AUDI AG.

Left Rear Door Control Module, Left Rear Window Regulator Motor, Left Rear Door Warning/Entry Lights

E52	Left Rear Window Regulator Switch, (In LR Door)
J388	Left Rear Door Control Module
L110	Left Rear Door Opener Illumination
T10g	10-Pin Connector, black, on left rear door control module
T16d	16-Pin Connector, brown, on left rear door control module
T20b	20-Pin Connector, black, door B-pillar, left
V26	Left Rear Window Regulator Motor
W33	Left Rear Entry Light
W37	Left Rear Door Warning Light
77	Ground connection (lower left B-pillar)
207	Ground connection, in left rear door wiring harness
A146	Comfort System High-bus Connection (in instrument panel wiring harness)
A147	Comfort System Low-bus Connection (in instrument panel wiring harness)
B207	Connection (comfort), in passenger compartment wiring harness
R54	Connection (58s) (in left rear door wiring harness)
Q	where applicable

ws	=	white
sw	=	black
ro	=	red
br	=	brown
gn	=	green
bl	=	blue
gr	=	grey
li	=	lilac
ge	=	yellow
or	=	orange
rs	=	pink

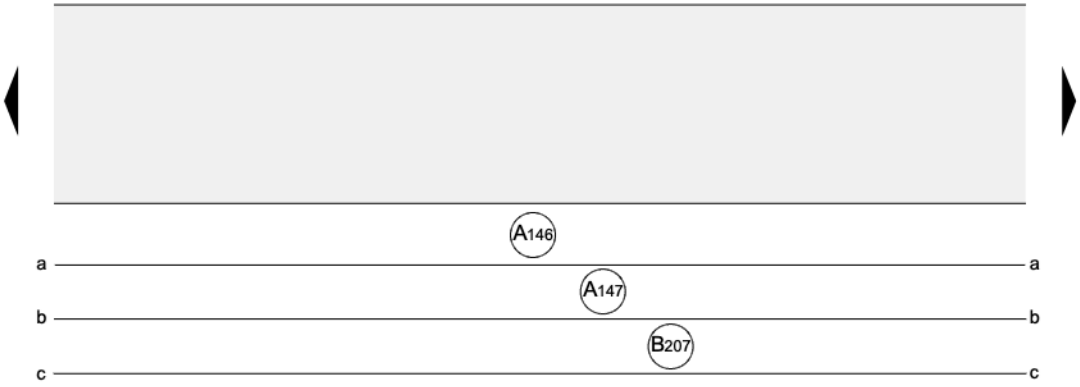

Left Rear Door Control Module, Left Rear Central Locking Lock Unit

F10	Left Rear Door Contact Switch
F132	Left Rear Central Locking System Actuator
F222	Left Rear Central Locking Lock Unit
F245	Left Rear Door Central Locking -SAFE- Function Actuator
J388	Left Rear Door Control Module
T12b	12-Pin Connector, black, on left rear door control module
V115	Left Rear Central Locking System Motor
V163	Left Rear Central Locking (Safe) Motor
A146	Comfort System High-bus Connection (in instrument panel wiring harness)
A147	Comfort System Low-bus Connection (in instrument panel wiring harness)
B207	Connection (comfort), in passenger compartment wiring harness

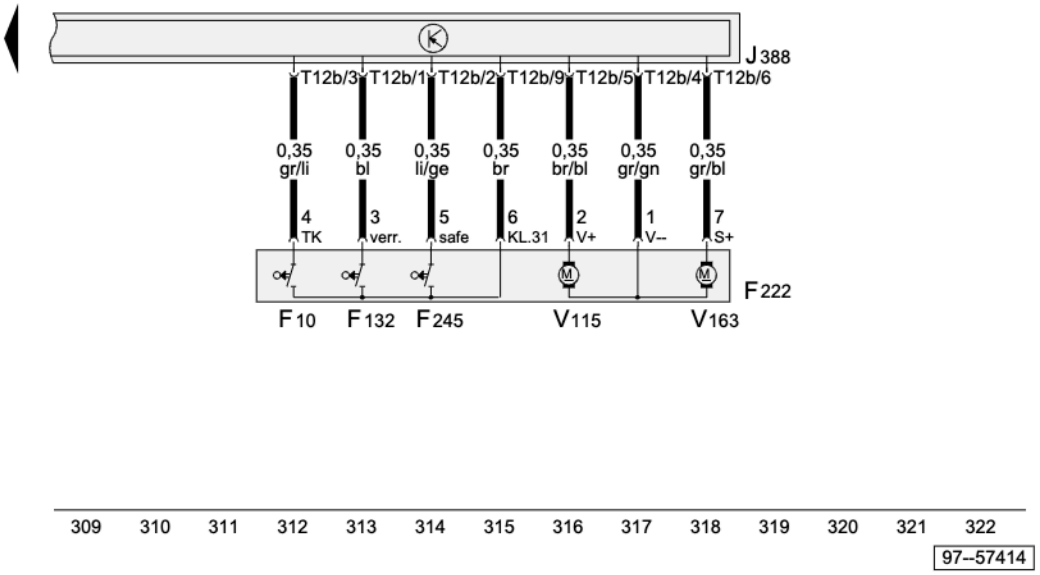

ws	=	white
sw	=	black
ro	=	red
br	=	brown
gn	=	green
bl	=	blue
gr	=	grey
li	=	lilac
ge	=	yellow
or	=	orange
rs	=	pink

Protected by copyright. Copying for private or commercial purposes, in part or in whole, is not permitted unless authorised by AUDI AG. AUDI AG does not guarantee or accept any liability with respect to the correctness of information in this document. Copyright by AUDI AG.

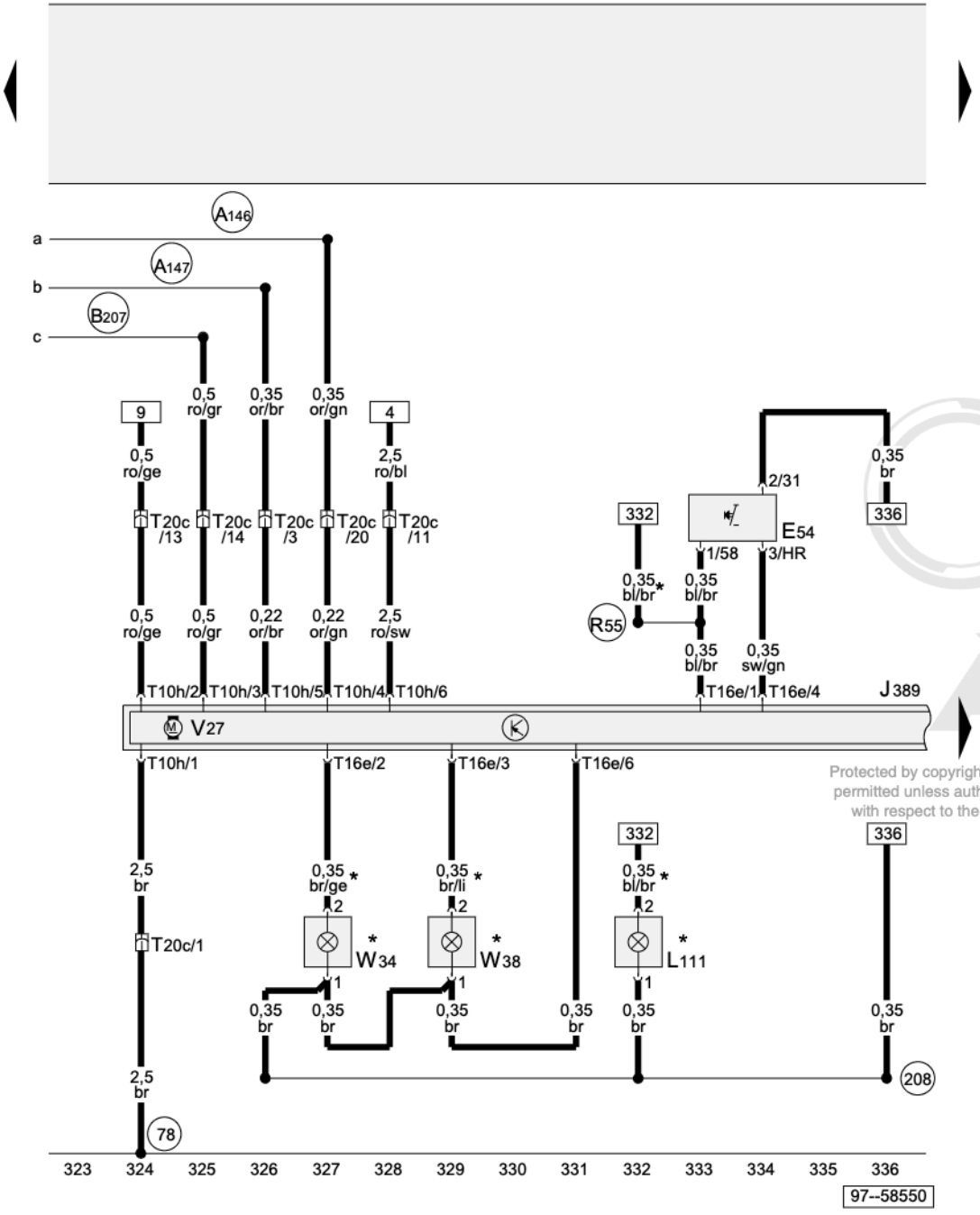

Right Rear Door Control Module, Right Rear Window Regulator Motor, Right Rear Door Warning/Entry Lights

E54	Right Rear Window Regulator Switch, (In RR Door)
J389	Right Rear Door Control Module
L111	Right Rear Door Opener Illumination
T10h	10-Pin Connector, black, on right rear door control module
T16e	16-Pin Connector, brown, on right rear door control module
T20c	20-Pin Connector, black, door B-pillar, right
V27	Right Rear Window Regulator Motor
W34	Right Rear Entry Light
W38	Right Rear Door Warning Light
78	Ground connection (lower right B-pillar)
208	Ground connection, in right rear door wiring harness
A146	Comfort System High-bus Connection (in instrument panel wiring harness)
A147	Comfort System Low-bus Connection (in instrument panel wiring harness)
B207	Connection (comfort), in passenger compartment wiring harness
R55	Connection (58s) (in right rear door wiring harness)
Q	where applicable

Protected by copyright. Copying for private or commercial purposes, in part or in whole, is not permitted unless authorised by AUDI AG. AUDI AG does not guarantee or accept any liability with respect to the correctness of information in this document. Copyright by AUDI AG.

ws	=	white
sw	=	black
ro	=	red
br	=	brown
gn	=	green
bl	=	blue
gr	=	grey
li	=	lilac
ge	=	yellow
or	=	orange
rs	=	pink

Right Rear Door Control module, Right Rear Central Locking Lock Unit

F11	Right Rear Door Contact Switch
F134	Right Rear Central Locking System Actuator
F223	Right Rear Central Locking Lock Unit
F246	Right Rear Door Centarl Locking -SAFE- Function Actuator
J389	Right Rear Door Control Module
T12c	12-Pin Connector, black, on right rear door control module
V97	Right Rear Central Locking System Motor
V164	Right Rear Central Locking (Safe) Motor

Protected by copyright. Copying for private or commercial purposes, in part or in whole, is not permitted unless authorised by AUDI AG. AUDI AG does not guarantee or accept any liability with respect to the correctness of information in this document. Copyright by AUDI AG.

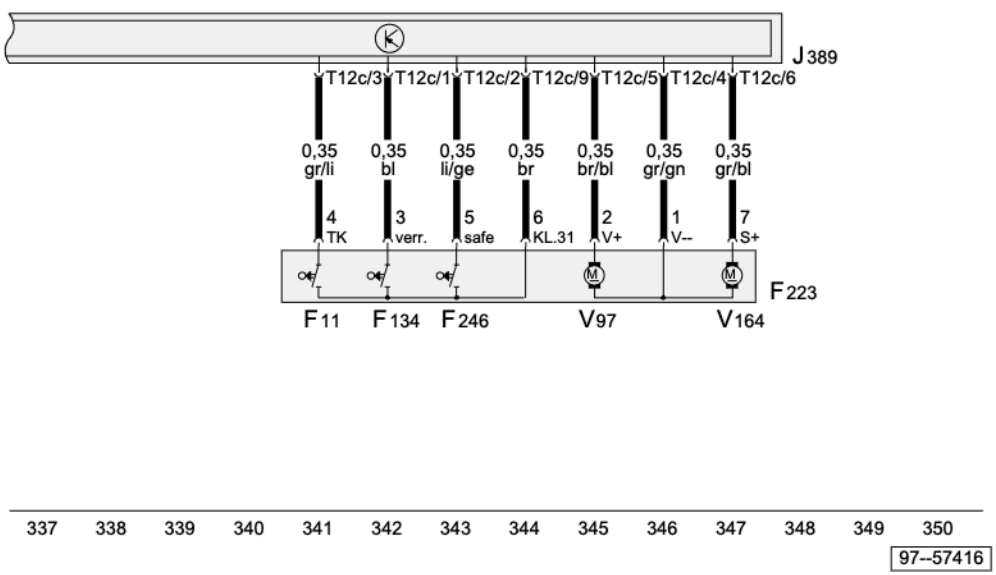

ws	=	white
sw	=	black
ro	=	red
br	=	brown
gn	=	green
bl	=	blue
gr	=	grey
li	=	lilac
ge	=	yellow
or	=	orange
rs	=	pink